101-11 5-3740-200-25P

TM 5-3740-200-25P

DEPARTMENT OF THE ARMY TECHNICAL MANUAL

RETURN TO SOV

ORGANIZATIONAL, DIRECT AND GENERAL SUPPORT, AND DEPOT MAINTENANCE REPAIR PARTS AND SPECIAL TOOLS LIST

SPRAYER, INSECTICIDE, SKID MOUNTED: GASOLINE DRIVEN; 40 GAL PER HOUR; FOG (CURTIS AUTOMOTIVE DEVICES MODEL CFR-40000) FSN 3740-790-6188

This copy is a reprint which includes current pages from Changes 2 and 3.

HEADQUARTERS, DEPARTMENT OF THE ARMY

APRIL 1967

*TM 5-3740-200-25P
C 2

Change No. 2

HEADQUARTERS
DEPARTMENT OF THE ARMY
Washington, D. C., *3 January 1972*

Organizational, Direct and General Support and Depot Maintenance Repair Parts and Special Tools List SPRAYER, INSECTICIDE, SKID MOUNTED; GASOLINE DRIVEN; 40 GAL. PER HOUR; FOG (CURTIS AUTOMOTIVE DEVICES MODEL CFR-40000) FSN 3740-790-6188

Current as of 26 October 1971

TM 5-3740-200-25P, 10 April 1967, is changed as follows:

Page xi, paragraph 7; change FMC 01510, MIEHLE-DEXTER superchanger division of Christianson Machine Co., Inc. to FMC 03951, MIEHLE and GOSS AND DEXTER.

8. Report of Equipment Publication Improvements.

The reporting of errors, omissions, and recommendations for improving this publications by the individual user is encouraged. Reports should be submitted on DA Form 2028 (Recommended Changes to Publications) and forwarded direct to Commanding General, U.S. Army Mobility Equipment Command, ATTN: AMSME-MP, 4300 Goodfellow Boulevard, St. Louis, Mo. 63120.

All changes, additions, or deletions of Federal stock numbers, or manufacturers part number within this change should be appropriately reflected in the index.

Page xiii, in line 2, Group 55, FSN 3740-542-3717, column 3 (01510) change to read (03951).

*This change supersedes C1, 21 October 1968.

Page	Line	Action	1 Source maintenance and recoverability code: Source	Maintenance	Recoverability	2 Federal stock No.	3 Description	4 Unit of issue	5 Qty inc in unit pack	6 Qty inc in unit	7 30-day DS/GS maint. allowance: 1-20	21-50	51-100	8 1 yr alw per 100 equip cntgcy planing purposes	9 Depot maint alw per 100 equip	10 Illustrations: Figure No.	Item or symbol No.
							Section III — Repair Parts for Organizational Maintenance										
							Part I										
							GROUP 01 — ENGINE										
							0100 — ENGINE ASSEMBLY										
							0101 — CRANKCASE, BLOCK, CYLINDER HEAD										
1	0030	Add col 1, ch Col 2	P			5306-225-8504	BOLT, MACHINE * * *										
	0038	Add col 1a	P				PIN, SPRING * * * (66299) PA332										
							0102 — CRANKSHAFT										
	0068	Add col 1a	P				KEY, MACHINE * * *										
	0082	Ch col 3		X2	O		SHEAVE, CRANKSHAFT (97403) 13200E5435										
							0302 — FUEL PUMPS										
3	0253	Add col 1a and col 3	P				SCREW CAP * * * (66289) XD6										
							0306 — TANKS, LINES, FITTINGS										
4	0275	Ch col 3				4710-872-1781	LINE, FUEL, PLASTIC * * * (97403) 13200E5428-1										
							GROUP 04 — EXHAUST SYSTEM										
							0401 — MUFFLER AND PIPES										
6	0358	Ch col 3	M	O			PIPE, EXHAUST * * * (97403) 13200E5434										
							GROUP 06 — ELECTRICAL SYSTEM										
							0602 — BATTERIES, STORAGE										
9	0592	Ch col 2		O		5310-542-2628	NUT, PLAIN * * * (96906) MS35690-602										

Page	Line	Action	1 Source maintenance and recoverability code: Source	Maintenance	Recoverability	2 Federal stock No.	3 Description	4 Unit of issue	5 Qty inc in unit pack	6 Qty inc in unit	7 30-day DS/GS maint. allowance: 1-20	21-50	51-100	8 1 yr alw per 100 equip cntgcy planing purposes	9 Depot maint alw per 100 equip	10 Illustrations: Figure No.	Item or symbol No.
							GROUP 18 — BODY, CAB, HOOD AND HULL										
							1801 — BODY, CAB, HOOD CANOPY A										
11	0630	Ch col 3	X2	O			CANOPY ASSEMBLY (97403) 13200E5402										
	0631	Ch col 3	X2	O			DECK PLATE (97403) 13200E5417										
	0632	Ch col 3	X2	O			FLANGE, MUFFLER (97403) 13200E5427										
	0633	Ch col 3				5310-584-5005	NUT, PLAIN, HEXAGON: * * *										
	0634	Ch col 3				5305-068-0502	SCREW, MACHINE: * * *										
	0635	Ch col 3				5310-527-3289	WASHER, LOCK: * * *										
	0636	Ch col 3	X2	O			PANEL, FRONT (97403) 13200E5413										
	0637	Ch col 3	X2	O			GROMMET, FRONT PANEL (97403) 13200E5413-5										
	0638	Ch col 3	X2	O			RETAINER, FRONT PANEL (97403) 13200E5413-6										
	0639	Ch col 3	X2	O			STUD, FRONT PANEL (97403) 13200E5413-4										
	0640	Ch col 3	X2	O			PANEL, REAR (97403) 13200E5415										
	0641	Ch col 3	X2	O			GROMMET, REAR PANEL (97403) 13200E5415-5										
	0642	Ch col 3	X2	O			RETAINER, REAR PANEL (97403) 13200E5415-6										
	0643	Ch col 3	X2	O			STUD, REAR PANEL (97403) 13200E5415-4										
	0646	Ch col 3	X2	O			STRAP, HOLD DOWN: * * * (97403) 13200E5423										
							1808 — STRAPS										
	0653	Ch col 3	X2	O			STRAP, HOLD DOWN: * * * (97403) 13200E5422										

Page	Line	Action	1 Source maintenance and recoverability code: Source	Maintenance	Recoverability	2 Federal stock No.	3 Description	4 Unit of issue	5 Qty inc in unit pack	6 Qty inc in unit	7 30-day DS/GS maint. allowance: 1-20	21-50	51-100	8 1 yr alw per 100 equip cntgcy planing purposes	9 Depot maint alw per 100 equip	10 Illustrations: Figure No.	Item or symbol No.
11	0654	Ch col 3	X2	O			STRAP, HOLD DOWN: * * * (97403) 13200E5424										
	0655	Ch col 3	X2	O			STRAP, HOLD DOWN: * * * (97403) 13200E5425-1										
							GROUP 22 — BODY, CHASSIS OR HULL ACCESSORY ITEMS										
							2201 — CANVAS ITEMS										
	0657	Ch col 3	X2	O			CURTAIN ASSEMBLY (97403) 13200E5421										
12	0659	Ch col 3	M	O		9320-771-1513	SHIM: * * * (97403) 13200E45420-2										
	0659A	Ch col 3	P	O		5330-505-6611	RUBBER SHEET, SOLID (97403)										
							2210 — DATA PLATES										
	0667	Ch col 3	X2	O			LABEL SET * * * (97403) 13200E5402										
	0668	Ch col 3	X2	O			PLATE, IDENTIFICATION: * * * (97403) 13200E5399-38										
	0669	Ch col 3	X2	O			PLATE, IDENTIFICATION: * * * (97403) 13200E5399-35										
	0672	Ch col 3	X2	O			PLATE, IDENTIFICATION: * * * (97403) 13200E5399-39										
	0673	Ch col 3	X2	O			PLATE, IDENTIFICATION: * * * (97403) 13200E5399-37										
	0674	Ch col 3	X2	O			PLATE, IDENTIFICATION: * * * (97403) 13200E5399-36										
	0675	Ch col 3	X2	O			PLATE, IDENTIFICATION: * * * (97403) 13200E5399-34										

Page	Line	Action	1 Source maintenance and recoverability code: Source	Maintenance	Recoverability	2 Federal stock No.	3 Description	4 Unit of issue	5 Qty inc in unit pack	6 Qty inc in unit	7 30-day DS/GS maint. allowance: 1-20	21-50	51-100	8 1 yr alw per 100 equip cntgcy planing purposes	9 Depot maint alw per 100 equip	10 Illustrations: Figure No.	Item or symbol No.
12	0679	Ch col 3	X2	O			PLATE, NAME: * * * (03951) 6459										
	0681	Ch col 3		O			RIVET, SOLID: * * * (97403) 13200E5399-40										
	0682	Ch col 3	X2	O			SCREW DRIVE: * * * (03951) 1120										
13	0692	Ch col 3	X1				FLOAT, OUT (82254) CFR 40469										
	0699	Ch col 3	X1				STOP, FLOAT (82254) 304A193										
	0700	Ch col 3	X1				TUBE, METER (82254) CFR 40468										
	0701	Ch col 3	X2			6685-855-7226	GAGE, PRESSURE: * * * (97403) 13200E5399-7										
	0710	Ch col 2		O		5310-012-0614	NUT, PLAIN, HEXAGON: * * * (96906) MS35650-102										
	0713	Ch col 3	M	O			TUBE: * * * (97403) 13200E5399-24										
	0714	Ch col 3	M	O		3740-971-1419	TUBE: * * * (97403) 13200E5399-23										
	0715	Ch col 3	X2	O			VALVE, NEEDLE: * * * (97403) 13200E5399-2										
	0717	Ch col 3		O		5310-595-7235	WASHER, LOCK: * * * (96906) MS35333-20										
							GROUP 55 — PUMPS 5500 — PUMP ASSEMBLY										
	0726	Ch col 2		O		5310-543-2628	NUT, PLAIN HEXAGON: * * * (96906) MS35690-602										
	0731	Ch col 3	X2	O			SHIM: * * * (97403) 13200E5431										

Page	Line	Action	1 Source maintenance and recoverability code: Source	Maintenance	Recoverability	2 Federal stock No.	3 Description	4 Unit of issue	5 Qty inc in unit pack	6 Qty inc in unit	7 30-day DS/GS maint. allowance: 1-20	21-50	51-100	8 1 yr alw per 100 equip cntgcy planing purposes	9 Depot maint alw per 100 equip	10 Illustrations: Figure No.	Item or symbol No.
							GROUP 57 — SPRAY EQUIPMENT 5703 — AIR BLOWER ASSEMBLY										
14	0758 thru 0831	Delete all cols															
15	0836 thru 0845	Delete all cols															
							5707—INSTRUMENT PANEL										
	0856	Ch col 3	X2	O			BRACKET, PANEL (97403) 13200E5412										
	0858	Ch col 3	X2	O			PANEL ASSEMBLY, INSTRUMENT (97403) 13200E5399										
	0859	Ch col 3	X2	O			LEVEL SET, IDENTIFICATION (97403) 13200E5402										
							5708—TANKS, VALVES, LINES, HOSES, FITTINGS AND LIQUID STRAINER										
16	0869	Ch col 3		O		4730-277-7899	BUSHING, PIPE: * * * (97403) 13200E5499-16										
	0872	Ch col 3		O		4730-278-2538	CLAMP, HOSE: * * * (97403) 13200E5399-29										
	0874	Ch col 3	X2	O		4820-845-1096	COCK, DRAIN: * * * (97403) 13200E5430-4										
	0875	Ch col 3	X2	O			CONNECTOR, HOSE, PIPE: * * * (97403) 13200E5399-12										
	0876	Ch col 3	X2	O			CONNECTOR, HOSE: * * * (97403) 13200E5399-20										
	0877	Ch col 3	X2	O			CONNECTOR, HOSE: * * * (97403) 13200E5399-20										
	0880	Ch col 3	X2	O			CROSS, PIPE: * * * (97403) 13200E5341-4										

			1			2	3	4	5	6	7			8	9	10	
Page	Line	Action	Source maintenance and recoverability code			Federal stock No.	Description	Unit of issue	Qty inc in unit pack	Qty inc in unit	30-day DS/GS maint. allowance			1 yr alw per 100 equip cntgcy planing purposes	Depot maint alw per 100 equip	Illustrations	
			Source	Maintenance	Recoverability						1-20	21-50	51-100			Figure No.	Item or symbol No.
16	0881	Ch col 3	X2	O			ELBOW, HOSE: * * * (97403) 13200E5399-19										
	0882	Ch col 3	X2	O			ELBOW, HOSE: * * * (97403) 13200E5399-19										
	0887	Ch col 3	X2	O			ELBOW, PIPE TO TUBE: * * * (97403) 13200E5341-7										
	0889	Ch col 3	X2	O			HOSE: * * * (97403) 13200E5399-32										
	0890	Ch col 3	M	O			HOSE: * * * (97403) 13200E5399-31										
17	1002	Ch col 3	X	O			NIPPLE, PIPE: * * * (97403) 13200E5399-13										
	1005	Ch col 1a	P	O			STRAINER ASSEMBLY, HOSE (82254) CFR 40587										
	1019	Ch col 3	X2	O			TEE, PIPE: * * * (97403) 13200E5399-31										
	1020	Ch col 3	X2	O			TEE, PIPE: * * * (97403) 13200E5341-3										
	1021	Ch col 3	X2	O			TEE, PIPE TO TUBE: * * * (97403) 13200E5341-9										
	1022	Ch col 3	X2	O			TUBE ASSEMBLY: * * * (97403) 13200E5341-1										
	1023	Ch col 3	M	O			TUBE ASSEMBLY: * * * (97403) 13200E5341-8										
18	1024	Ch col 1A & 3 Add col 2	M	O		4720-994-1522	TUBE FLUID: * * * (97403) 13200E5399-27										
	1025	Ch col 3	X2	O			TUBE FLUID: * * * (97403) 13200E5399-26										
	1026	Ch col 3 Add Col 2	X2	O		4720-995-1522	TUBE, TEFLON: * * * (97403) 13200E5399-25										
	1027	Ch col 3	M	O			TUBE, VINYL: * * * (97403) 13200E5399-23										
	1028	Ch col 3	X2	O			UNION, HALF: * * * (97403) 13200E5399-11										

Page	Line	Action	1 Source maintenance and recoverability code: Source	Maintenance	Recoverability	2 Federal stock No.	3 Description	4 Unit of issue	5 Qty inc in unit pack	6 Qty inc in unit	7 30-day DS/GS maint. allowance: 1-20	21-50	51-100	8 1 yr alw per 100 equip cntgcy planing purposes	9 Depot maint alw per 100 equip	10 Illustrations: Figure No.	Item or symbol No.
18	1029	Ch col 3	X2	O			UNION HALF: * * * (97403) 13200E5399-11										
	1030	Ch col 3	X2	O			VALVE, NEEDLE: * * * (97403) 13200E5399-17										
	1033	Ch col 3	X2	O			VALVE, 3 WAY: * * * (97403) 13200E5399-5										
							GROUP 95—GENERAL USE STANDARDIZED PARTS										
							9501 —BULK MATERIAL										
	1042	Ch col 3	P	O		4710-162-0991	PIPE, STEEL: * * * (97403) 13200E5434										
	1043	Ch col 3	P	O		4710-809-8149	PLASTIC TUBING: * * * (97403) 13200E5399-24										
	1044	Ch col 3	P	O		5330-505-6611	RUBBER SHEET SOLID: * * * (97403) 13200E5420-1										
	1045	Ch col 3	P	O		9515-554-0893	STEEL STRIP, CARBON, HOT ROLLED: * * * (97403) 13200E5419										
							GROUP 99 — PARTS PECULIAR										
							9901—MULTI-LISTED PARTS										
19	1053	Ch col 3	X2	O			CONNECTOR, HOSE, PIPE: * * * (97403) 13200E5399-20										
	1054	Ch col 3	X2	O			ELBOW, HOSE: * * * (97403) 13200E5399-19										
	1057	Ch col 3	X2	O			UNION, HALF: * * * (97403) 13200E5399-11										

Page	Line	Action	1 Source maintenance and recoverability code: Source	Maintenance	Recoverability	2 Federal stock No.	3 Description	4 Unit of issue	5 Qty inc in unit pack	6 Qty inc in unit	7 30-day DS/GS maint. allowance: 1-20	21-50	51-100	8 1 yr alw per 100 equip cntgcy planing purposes	9 Depot maint alw per 100 equip	10 Illustrations: Figure No.	Item or symbol No.
							GROUP 57 — SPRAY EQUIPMENT COMPONENTS 5704—SPRAY DUCTS AND MANIFOLDS										
23	1196	Ch col 3	X2	O			MANIFOLD SPRAY ASSEMBLY (97403) 13200E5341										
	1197	Ch col 3	X2	O			CLAMP, DRUM (97403) 13200E5358										
	1198	Ch col 3	X2	O			ELBOW LONG (97403) 13200E5350										
	1199	Ch col 3	X2	O			ELBOW SHORT (97403) 13200E5353										
	1200	Delete all	X2				END CAP										
	1201	Delete all	X2				NOZZLE HEAD										
	1203	Delete all	X2				NOZZLE ASSEMBLY										
	1202	Ch col 3	X2	O			SCREW TOGGLE: * * * (97403) 13200E5359										
							GROUP 57—SPRAY EQUIPMENT COMPONENTS 5704—SPRAY DUCTS AND MANIFOLDS										
27	1357	Delete all col	X2				END CAP:										
	1358	Delete all col	X2				NOZZLE HEAD										
	1353	Ch col 3	X2	O			MANIFOLD SPRAY ASSEMBLY (97403) 13200E5341										
	1354	Ch col 3	X2	O			CLAMP, DRUM (97403) 13200E5358										
	1355	Ch col 3	X2	O			ELBOW, LONG (81336) 13200E5350										
	1356	Ch col 3	X2	O			ELBOW, SHORT (81336) 13200E5353										
	1359	Ch col 3	X2	O			SCREW, TOGGLE: * * * (81336) 13200E5359										

			1			2	3	4	5	6	7			8	9	10	
Page	Line	Action	Source maintenance and recoverability code			Federal stock No.	Description	Unit of issue	Qty inc in unit pack	Qty inc in unit	30-day DS/GS maint. allowance			1 yr alw per 100 equip cntgcy planing purposes	Depot maint alw per 100 equip	Illustrations	
			Source	Maintenance	Recoverability						1-20	21-50	51-100			Figure No.	Item or symbol No.
27	1360 thru 1365	Delete all col															
							GROUP 57 — SPRAY EQUIPMENT COMPONENTS 5704 — SPRAY DUCTS AND MANIFOLDS										
31	1511	Ch col 3	X2	O	R		MANIFOLD SPRAY ASSEMBLY										
		Add col 1c					(97403) 13200E5341										
	1512	Ch col 3	X2	O			CLAMP, DRUM (97403) 13200E5358										
	1513	Ch col 3	X2	O			ELBOW, LONG (97403) 13200E5350										
	1514	Ch col 3	X2	O			ELBOW, SHORT (97403) 13200E5353										
	1515	Delete all col	X2	O													
	1516	Delete all col	X2	O													
	1517	Ch col 3	X2	O			SCREW, TOGGLE: * * * (97403) 13200E5359										
	1518	Ch col 3	X2	O		3740-977-8672	NOZZLE ASSEMBLY▲ SPRAY										
34	1670	Add col 1c Ch col 3	X2	O			MANIFOLD SPRAY ASSEMBLY (97403) 13200E5341										
	1671	Ch col 3	X2	O			CLAMP, DRUM (97403) 13200E5358										
	1672	Ch col 3	X2	O			ELBOW, LONG (97403) 13200E5350										
	1673	Ch col 3	X2	O			ELBOW, SHORT (97403) 13200E5353										
	1674	Delete all col															
	1675	Delete all col															
	1676	Ch col 3	X2	O			SCREW, TOGGLE: * * * (97403) 13200E5359										

			1			2	3	4	5	6	7			8	9	10	
Page	Line	Action	Source maintenance and recoverability code			Federal stock No.	Description	Unit of issue	Qty inc in unit pack	Qty inc in unit	30-day DS/GS maint. allowance			1 yr alw per 100 equip cntgcy planing purposes	Depot maint alw per 100 equip	Illustrations	
			Source	Maintenance	Recoverability						1-20	21-50	51-100			Figure No.	Item or symbol No.
35	1677 thru 1682	Delete all col					GROUP 57 — SPRAY EQUIPMENT COMPONENTS 5704 — SPRAY DUCTS AND MANIFOLDS										
38	1820 thru 1834	Delete all col					GROUP 76 — FIRE FIGHTING EQUIPMENT COMPONENTS 7603 — FIRE EXTINGUISHER										
39	1838	Add col 2	X2	O		5310-584-5005	NUT, PLAIN, HEXAGON: * * * (96906) MS35690-405										
40	1849	Ch col 3	X2	O			PART VII GROUP 01—ENGINE 0101 — CRANKCASE, BLOCK, CYLINDER HEAD EXTENSION, OIL DRAIN (82254) CFR 40974										
42	1973 thru 1987	Delete all col					GROUP 57 — SPRAY EQUIPMENT COMPONENTS 5704 — SPRAY DUCTS AND MANIFOLDS										

Page	Line	Action	1 Source maintenance and recoverability code: Source	Maintenance	Recoverability	2 Federal stock No.	3 Description	4 Unit of issue	5 Qty in unit pack	6 Qty inc in unit	7 30-day DS/GS maint. allowance: 1-20	21-50	51-100	8 1 yr alw per 100 equip cntgcy planing purposes	9 Depot maint alw per 100 equip	10 Illustrations: Figure No.	Item or symbol No.
							SECTION IV — REPAIR PARTS FOR DS, GS AND DEPOT MAINTENANCE PART I GROUP 01 — ENGINE 0100 — ENGINE ASSEMBLY										
	0030	Add col 1a, 7c, 8 ch col 2	P	O		5306-225-8504	BOLT, MACHINE: * * *						2	6			
44	0038	Add col 1a, 7c, 8 Ch col 2	P	O		5315-753-3893	PIN, SPRING: * * * (66289) PA332						2	6			
	0042	Add col 1a, 3	P	O		5305-068-0502	SCREW, CAP, HEXAGON HEAD: * * * (66289) XD6										
							0102 — CRANKSHAFT										
45	0068	Add col 1a, 7c, 8	P	O		5315-952-3107	KEY, MACHINE: * * *						2	6			
	0082	Ch col 3	X2	O			SHEAVE, CRANKSHAFT: * * * (97403) 13200E5435										
							0104 — PISTONS, CONNECTING RODS										
46	0104	Ch col 7c, 8, 9	P	H		5340-374-9707	RING, RETAINING: * * * (96906) MS13962-1						2	12	20		
							GROUP 03—FUEL SYSTEM 0302 — FUEL PUMPS										
50	0253	Add col 1a ch col 7c, 8, 9	P	O		5305-068-0502	SCREW, CAP, HEXAGON HEAD: * * *						2	6	10		
							0306 — TANKS, LINES, FITTINGS										
51	0275	Ch col 3, 8, 9	P	O		4710-872-1781	LINE, FUEL PLASTIC: * * * (97403) 13200E5428-1							6	*		

Page	Line	Action	1 Source maintenance and recoverability code: Source	Maintenance	Recoverability	2 Federal stock No.	3 Description	4 Unit of issue	5 Qty inc in unit pack	6 Qty inc in unit	7 30-day DS GS maint. allowance: 1-20	21-50	51-100	8 1 yr alw per 100 equip cntgcy planing purposes	9 Depot maint alw per 100 equip	10 Illustrations: Figure No.	Item or symbol No.
							GROUP 04 — EXHAUST SYSTEM										
							0401 — MUFFLER AND PIPES										
54	0358	Ch col 3	M	O			PIPE, EXHAUST (97403) 13200E5434										
							GROUP 06 — ELECTRICAL SYSTEM										
							0612 — BATTERIES, STORAGE										
59	0592	Ch col 2		O		5310-543-2628	NUT, PLAIN, HEXAGON: * * *										
							GROUP 15 — FRAME										
							1501 — FRAME ASSEMBLY										
60	0626	Ch col 3	X2	F			FASTENER: * * * (97403) 13200E5370-20										
							GROUP 18—BODY, CAB, HOOD AND HULL										
							1801—BODY, CAB, HOOD										
60	0630	Ch col 3	X2	O			CANOPY ASSEMBLY (97403) 13200E5402										
	0631	Ch col 3	X2	O			DECK PLATE (97403) 13200E5417										
	0632	Ch col 3	X2	O			FLANGE, MUFFLER (97403) 13200E5427										
	0636	Ch col 3	X2	O			PANEL, FRONT (97403) 13200E5413										
	0637	Ch col 3	X2	O			GROMMET, FRONT PANEL (97403) 13200E5413-5										
	0638	Ch col 3	X2	O			RETAINER, FRONT PANEL (97403) 13200E5413-6										
	0639	Ch col 3	X2	O			STUD, FRONT PANEL (97403) 13200E5413-4										
	0640	Ch col 3	X2	O			PANEL, REAR (97403) 13200E5415										
	0641	Ch col 3	X2	O			GROMMET, REAR PANEL (97403) 13200E5415-5										

1						2	3	4	5	6	7			8	9	10	
Page	Line	Action	Source maintenance and recoverability code			Federal stock No.	Description	Unit of issue	Qty inc in unit pack	Qty inc in unit	30-day DS/GS maint. allowance			1 yr alw per 100 equip cntgcy planing purposes	Depot maint alw per 100 equip	Illustrations	
			Source	Maintenance	Recoverability						1-20	21-50	51-100			Figure No.	Item or symbol No.
60	0642	Ch col 3	X2	O			RETAINER, REAR PANEL (97403) 13200E5415-6										
	0643	Ch col 3	X2	O			STUD, REAR PANEL (97403) 13200E5415-4										
	0646	Ch col 3	X2	O			STRAP, HOLD DOWN: * * * (97403) 13200E5423										
	0647	Ch col 3	X2	O			STRAP, HOLD DOWN: * * * (97403) 13200E5424										
61	0648	Ch col 3	X2	O			STRAP, HOLD DOWN: * * * (97403) 13200E5425-1										
							1808—STRAPS										
	0653	Ch col 3	X2	O			STRAP, HOLD DOWN: * * * (97403) 13200E5422										
	0654	Ch col 3	X2	O			STRAP, HOLD DOWN: * * * (97403) 13200E5424										
	0655	Ch col 3	X2	O			STRAP, HOLD DOWN: * * * (97403) 13200E5425-1										
							GROUP 22—BODY CHASSIS OR HULL AND ACCESSORY ITEMS										
							2201—CANVAS ITEMS										
	0651	Ch col 3	X2	O			CURTAIN ASSEMBLY (97403) 13200E5421										
	0659	Ch col 3	M	O		9320-771-1513	SHIM: * * * (97403) 13200E4520-2										
	0660	Ch col 3	M	O		3740-971-1418	STRIP, CURTAIN: (97403) 13200E5419										
							2210 — DATA PLATES										
	0667	Ch col 3	X2	O			LABEL SET, IDENTIFICATION (97403) 13200E5402										
	0668	Ch col 3	X2	O			PLATE, IDENTIFICATION: * * * (97403) 13200E5399-38										
	0669	Ch col 3	X2	O			PLATE, IDENTIFICATION: * * * (97403) 13200E5399-35										

			1			2	3	4	5	6	7			8	9	10	
Page	Line	Action	Source maintenance and recoverability code			Federal stock No.	Description	Unit of issue	Qty inc in unit pack	Qty inc in unit	30-day DS/GS maint. allowance			1 yr alw per 100 equip cntgcy planing purposes	Depot maint alw per 100 equip	Illustrations	
			Source	Maintenance	Recoverability						1-20	21-50	51-100			Figure No.	Item or symbol No.
62	0672	Ch col 3	X2	O			PLATE, IDENTIFICATION: * * * (97403) 13200E5399-39										
	0673	Ch col 3	X2	O			PLATE, IDENTIFICATION: * * * (97403) 13200E5399-37										
	0674	Ch col 3	X2	O			PLATE, IDENTIFICATION: * * * (97403) 13200E5399-36										
	0675	Ch col 3	X2	O			PLATE, IDENTIFICATION: * * * (97403) 13200E5399-34										
	0679	Ch col 3	X2	O			PLATE, NAME: * * * (03951) 6459										
	0681	Ch col 3				5320-117-7106	RIVET, SOLID: * * * (97403) 13200E5399-40										
	0682	Ch col 3	X2	O			SCREW DRIVE: * * * (00951) 1120										
							GROUP 47—GAGES (NON-ELECTRICAL) WEIGHING AND MEASURING DEVICES										
							4702—GAGES, LINES AND FITTINGS										
	0692	Ch col 3	X1				FLOAT OUT 82254 CFR40469										
	0699	Ch col 3	X1				STOP, FLOAT (22375) 304A193										
	0700	Ch col 3	X1				TUBE, METER (82254) CFR 40468										
	0701	Ch col 3	X2	O		6685-855-7226	GAGE, PRESSURE: * * * (97403) 13200E5399-7										
63	0710	Ch col 2		O		5310-012-0614	NUT, PLAIN, HEXAGON: * * * (96906) MS35650-102										
	0713	Ch col 3	M	O			TUBE: * * * (97403) 13200E5399-24										

Page	Line	Action	1 Source maintenance and recoverability code: Source	Maintenance	Recoverability	2 Federal stock No.	3 Description	4 Unit of issue	5 Qty inc in unit pack	6 Qty inc in unit	7 30-day DS/GS maint. allowance: 1-20	21-50	51-100	8 1 yr alw per 100 equip cntgcy planing purposes	9 Depot maint alw per 100 equip	10 Illustrations: Figure No.	Item or symbol No.
63	0714	Ch col 3	M	O		3740-971-1419	TUBE: * * * (97403) 13200E5399-23										
	0715	Ch col 3	X2	O			VALVE, NEEDLE: * * * (97403) 13200E5399-2										
	0717	Ch col 3				5310-595-7235	WASHER, LOCK: * * * (96906) MS35333-20										
							GROUP 55—PUMPS										
							5500—PUMP ASSEMBLY										
	0726	Ch col 2				5310-543-2628	NUT, PLAIN, HEXAGON: * * *										
	0728	Add col 2	X2	O		4320-021-1740	PUMP, ASSEMBLY, WATER (09058) 820-6-305										
	0731	Ch col 3	X2	O			SHIM: * * * (97403) 13200E5431										
64	0745	Ch col 1a, 7c, 8, 9 add col 2	P	F		5360-498-6252	SPRING, SEAL: * * * (09058) 213-10-215						2	10	10		
							GROUP 57—SPRAY EQUIPMENT										
							5703—AIR BLOWER ASSEMBLY										
	0759	Ch col 3	X2	O			AIR BLOWER ASSEMBLY (03951) 10-4009-409										
	0760	Ch col 1a, 3, 7c, 8, 9	P	H			BEARING, BALL: * * * (03951) 11249						2	6	6		
	0761	Ch col 1a, 3, 7c, 8, 9	P	H			BEARING, ROLLER: * * * (03951) 11248						2	6	4		
	0767	Ch col 3	X2	O			BREATHER ASSEMBLY, VENTILATION (03951) 90247										
	0768	Ch col 3	X1				BASE, BREATHER (03951) 569021										
	0769	Ch col 3	X2	O			ELEMENT, BREATHER (03951) R-16-16										
65	0771	Ch col 3	X1				SHIELD, BREATHER (03951) 56870B										
	0774	Ch col 3	X1				CAP, BEARING: * * * (03951) 11703										

Page	Line	Action	1 Source maintenance and recoverability code: Source	Maintenance	Recoverability	2 Federal stock No.	3 Description	4 Unit of issue	5 Qty inc in unit pack	6 Qty inc in unit	7 30-day DS/GS maint. allowance: 1-20	21-50	51-100	8 1 yr alw per 100 equip cntgcy planing purposes	9 Depot maint alw per 100 equip	10 Illustrations: Figure No.	Item or symbol No.
65	0075	Ch col 3	X1				COVER, GEAR END: * * * (03951) 11701										
	0776	Ch col 3	X2	M			DOWEL, GEAR: * * * (03951) 6036										
	0777	Ch col 3	X2	O			FITTING, LUBRICATING: * * * (03951) 90265										
	0778	Ch col 3	X2	O			FITTING, RELIEF (03951) 90102										
	0779	Ch col 3	X2	F			GASKET: * * * (03951) 11705										
	0780	Ch col 3	X2	F			GASKET: * * * (03951) 11322										
	0781	Ch col 3	P	O		3740-542-3717	GASKET: * * * (03951) 7932										
	0782	Ch col 3	X2	H			GEAR ASSEMBLY: * * * (03951) 60169										
	0783	Ch col 3	X1				HOUSING: * * * (03951) 11512										
	0784	Ch col 3	X2	H			KEY, GEAR: * * * (03951) 11150										
	0786	Ch col 3				5310-012-0279	NUT, PLAIN, HEXAGON: * * * (03951) 5871										
	0789	Ch col 3	X1				PLATE, FREE END: * * * (03951) 11429R										
	0790	Ch col 3	X1				PLATE: * * * (03951) 11772R										
	0791	Ch col 3	X2	F			PLATE LOCK (03951) 11739										
	0792	Ch col 3	X2	H			PLATE, LOCK: * * * (03951) 6038										
	0793	Ch col 3	X2	H			PLATE, LOCK: * * * (03951) 40325										
	0794	Ch col 3	X2	O			PLATE, NAME: * * * (03951) 6459										

Page	Line	Action	1 Source maintenance and recoverability code: Source	Maintenance	Recoverability	2 Federal stock No.	3 Description	4 Unit of issue	5 Qty inc in unit pack	6 Qty inc in unit	7 30-day DS/GS maint. allowance: 1-20	21-50	51-100	8 1 yr alw per 100 equip cntgcy planing purposes	9 Depot maint alw per 100 equip	10 Illustrations: Figure No.	Item or symbol No.
65	0795	Ch col 3	X2	O			PLUG, MAGNETIC: * * * (03951) 90209										
	0799	Ch col 3	X2	H			RETAINER, BEARING: * * * (03951) 11140										
	0800	Ch col 3	X2	F			RING, BEARING RETAINER: * * * (03951) 90259										
	0801	Ch col 3	X2	H			ROTOR, BLOWER (03951) 11255										
	0804	Ch col 3	X2	O			SCREW,DRIVE: * * * (03951) 1120										
	0807	Ch col 1a, 3, 7c, 8, 9	P				SEAL: * * * (03951) 11600						2	6	100		
	0808	Ch col 1a, 3, 6, 7b, 7c, 8, 9	P			5330-154-3120	SEAL: * * * (03951) 11443			4		2	2	24	12		
66	0809	Ch col 3	X2	H			SEAL: * * * (03951) 11443										
	0810	Ch col 3	X2	F			SHAFT, DRIVE (03951) 11707										
	0812	Ch col 3	X2	H			SHIM: * * * (03951) 40357										
	0813	Ch col 3	X1				SPACER, DOWEL: * * * (03951) 10991										
	0814	Ch col 3	X1				SPACER: * * * (03951) 8288										
	0817	Ch col 3	X2	H			WASHER, LOCK: * * * (03951) 5872										
	0818	Ch col 3	X2				WASHER, ROTOR SHAFT: * * * (03951) 11778										
	0819	Ch col 3	X2				BRACKET, BELT TENSION: * * * (97403) 13200E5432										
	0820	Ch col 3				5310-584-5005	NUT, PLAIN, HEXAGON: * * * (96906) MS35690-405										

Page	Line	Action	1 Source maintenance and recoverability code: Source	Maintenance	Recoverability	2 Federal stock No.	3 Description	4 Unit of issue	5 Qty inc in unit pack	6 Qty inc in unit	7 30-day DS/GS maint. allowance: 1-20	21-50	51-100	8 1 yr alw per 100 equip cntgcy planing purposes	9 Depot maint alw per 100 equip	10 Illustrations: Figure No.	Item or symbol No.
66	0831	Ch col 3	X2	O			FLANGE: * * * (97403) 13200E5355										
	0832	Ch col 3	X2	O			GUARD ASSEMBLY, BELT (97403) 13200E0109										
	0836	Ch col 3	X2	O			MANIFOLD ASSEMBLY, INTAKE (97403) 13200E5363										
							5707 — INSTRUMENT PANEL										
	0856	Ch col 3	X2	O			BRACKET, PANEL (97403) 13200E5412										
67	0858	Ch col 3	X2	O			PANEL ASSEMBLY, INSTRUMENT (97403) 13200E5399										
	0859	Ch col 3	X2	O			LABEL SET, IDENTIFICATION (97403) 13200E5402										
							5708 — TANKS, VALVES, LINES, HOSES, FITTINGS and LIQUID STRAINER										
	0869	Ch col 3				4730-277-7899	BUSHING, PIPE: * * * (97403) 13200E5499-16										
	0872	Ch col 3				4730-278-2538	CLAMP, HOSE: * * * (97403) 13200E5399-29										
	0874	Ch col 3	X2	O		4820-845-1096	COCK, DRAIN: * * * (97403) 13200E5430-4										
	0875	Ch col 3	X2	O			CONNECTOR, HOSE, PIPE: * * * (97403) 13200E5399-12										
	0876	Ch col 3	X2	O			CONNECTOR, HOSE, PIPE: * * * (97403) 13200E5399-20										
	0877	Ch col 3	X2	O			CONNECTOR, HOSE, PIPE: * * * (97403) 13200E5399-20										

Page	Line	Action	1 Source maintenance and recoverability code: Source	Maintenance	Recoverability	2 Federal stock No.	3 Description	4 Unit of issue	5 Qty inc in unit pack	6 Qty inc in unit	7 30-day DS/GS maint. allowance: 1-20	21-50	51-100	8 1 yr alw per 100 equip cntgcy planing purposes	9 Depot maint alw per 100 equip	10 Illustrations: Figure No.	Item or symbol No.
67	0880	Ch col 3	X2	O			CROSS, PIPE: * * * (97403) 13200E5341-4										
	0881	Ch col 3	X2	O			ELBOW, HOSE:*** (97403) 13200E5399-19										
	0882	Ch col 3	X2	O			ELBOW, HOSE:*** (97403) 13200E5399-19										
68	0887	Ch col 3	X2	O			ELBOW, PIPE TO TUBE: * * * (197403) 13200E5341-7										
	0889	Ch col 3, Add col 3	X2	O			HOSE: By-pass to supply tank, plastic, 3/8x5/16x 10' (97403) 13200E5399-32										
	0890	Ch col 3	M				HOSE: * * * (97403) 13200E5399-31										
	1002	Ch col 3	X2	O			NIPPLE, PIPE: * * * (97403) 13200E5399-13										
	1005	Ch col 1a, 7c 8	P				STRAINER ASSEMBLY, HOSE (82254) CFR 40587										
	1019	Ch col 3	X2	O			TEE, PIPE: * * * (97403) 13200E5430-8										
69	1020	Ch col 3	X2	O			TEE PIPE: * * * (97403) 13200E5341-3										
	1021	Ch col 3	X2	O			TEE, PIPE TO TUBE: * * * (97403) 13200E5431-9										
	1022	Ch col 3	X2	O			TUBE ASSEMBLY: * * * (97403) 13200E5341-1										
	1023	Ch col 3	M	O			TUBE ASSEMBLY: * * * (97403) 13200E5341-8										
	1024	Ch col 3	X2	O			TUBE FLUID: * * * (97403) 13200E5399-27										
	1025	Ch col 3	X2	O			TUBE, FLUID: * * * (97403) 13200E5399-26										
	1026	Ch col 3	X2	O			TUBE, TEFLON: * * * (97403) 13200E5399-25										

			1			2	3	4	5	6	7			8	9	10	
Page	Line	Action	Source maintenance and recoverability code			Federal stock No.	Description	Unit of issue	Qty inc in unit pack	Qty inc in unit	30-day DS/GS maint. allowance			1 yr alw per 100 equip cntgcy planing purposes	Depot maint alw per 100 equip	Illustrations	
			Source	Maintenance	Recoverability						1-20	21-50	51-100			Figure No.	Item or symbol No.
69	1027	Ch col 3	M	O			TUBE, VINYL:*** (97403) 13200E5399-23										
	1028	Ch col 3	X2	O			UNION, HALF: * * * (97403) 13200E5399-11										
	1029	Ch col 3	X2	O			UNION, HALF: * * * (97403) 13200E5399-11										
	1030	Ch col 3	X2	O			VALVE, NEEDLE: * * * (97403) 13200E5399-17										
	1033	Ch col 3	X2	O			VALVE, THREE WAY: * * * (97403) 13200E5399-5										
							GROUP 95—GENERAL USE STANDARDIZED PARTS 9501—BULK MATERIAL										
70	1042	Ch col 3	P	O		4710-162-0991	PIPE, STEEL: * * * (97403) 13200E5434										
	1043	Ch col 3	P	O		4710-809-8149	PLASTIC TUBING: * * * (97403) 13200E5399-24										
	1044	Ch col 3	P	O		5330-505-6611	RUBBER SHEET, SOLID: (97403) 13200E5420-1										
	1045	Ch col 3	P	O		9515-554-0893	STEEL STRIP, CARBON, HOT ROLLED: * * * (97403) 13200E5419										
							GROUP 99—PARTS PECULIAR 9901—MULTI-LISTED PARTS										
	1053	Ch col 3	X2	O			CONNECTOR, HOSE, PIPE: * * * (97403) 13200E5399-20										
	1054	Ch col 3	X2	O			ELBOW, HOSE:*** (97403) 13200E5399-19										
	1056	Ch col 3	X2	F			RECEPTACLE (97403) CFR40421										

Page	Line	Action	1 Source maintenance and recoverability code: Source	Maintenance	Recoverability	2 Federal stock No.	3 Description	4 Unit of issue	5 Qty inc in unit pack	6 Qty inc in unit	7 30-day DS/GS maint. allowance: 1-20	21-50	51-100	8 1 yr alw per 100 equip cntgcy planing purposes	9 Depot maint alw per 100 equip	10 Illustrations: Figure No.	Item or symbol No.
							PART II GROUP 01—ENGINE 0105—VALVES, CAMSHAFTS AND TIMING SYSTEM										
71	1069	Add col 1*a* Ch col 2, 7*c* 8, 9	P			5305-360-8335	SCREW, SELF LOCKING: * * * (66289) PB169A						2	7	4		
							GROUP 57—SPRAY EQUIPMENT COMPONENTS 5704—SPRAY DUCTS AND MANIFOLDS										
75	1196	Add col 1c chg Col 3	X2	O	R		MANIFOLD SPRAY ASSEMBLY (97403) 13200E5431										
	1197	Ch col 3	X2	O			CLAMP, DRUM (97403) 13200E5358										
	1198	Ch col 3	X2	O			ELBOW, LONG (97403) 13200E5350										
	1199	Ch col 3	X2	O			ELBOW, SHORT (97403) 13200E5353										
	1200	Ch col 3	X2	O			END CAP (97403) 13200E5347										
	1201	Ch col 3	X2	O			NOZZLE HEAD (97403) 13200E5342										
	1202	Ch col 3	X2	O			SCREW, TOGGLE: * * * (97403) 13200E5359										
	1203	Ch col 2 and 3	X2	O		3740-977-8672	NOZZLE ASSEMBLY: * * * (97403) 13200E5362										
							GROUP 57—SPRAY EQUIPMENT COMPONENTS 4704—SPRAY DUCTS AND MANIFOLDS										
80	1353	Ch col 3	X2	O			MANIFOLD SPRAY ASSEMBLY (97403) 13200E5341										

Page	Line	Action	1 Source maintenance and recoverability code: Source	Maintenance	Recoverability	2 Federal stock No.	3 Description	4 Unit of issue	5 Qty inc in unit pack	6 Qty inc in unit	7 30-day DS/GS maint. allowance: 1-20	21-50	51-100	8 1 yr alw per 100 equip cntgcy planing purposes	9 Depot maint alw per 100 equip	10 Illustrations: Figure No.	Item or symbol No.
80	1354	Ch col 3	X2	O			CLAMP, DRUM (97403) 13200E5358										
	1355	Ch col 3	X2	O			ELBOW, LONG (97403) 13200E5350										
	1356	Ch col 3	X2	O			(97403) 13200E5353										
	1357	Ch col 3	X2	O			END CAP (97403) 13200E5347										
	1358	Ch col 3	X2	O			NOZZLE HEAD (97403) 13200E5342										
	1359	Ch col 3	X2	O			SCREW, TOGGLE:*** (97403) 13200E5359										
							PART IV GROUP 01—ENGINE 0102—CRANKSHAFT										
82	1385	Add col 1a, chg col 2, 7c, 8, 9	P	H		5305-360-8335	SCREW, SELF LOCKING: *** (66289) PB169A						2	7	4		
							GROUP 57—SPRAY EQUIPMENT COMPONENTS 5704 —SPRAY DUCTS AND MANIFOLDS										
86	1511	Add col 1c, chg col 3	X2	O	R		MANIFOLD SPRAY ASSEMBLY (97403) 13200E5341										
	1512	Ch col 3	X2	O			CLAMP, DRUM (97403) 13200E5358										
	1513	Ch col 3	X2	O			ELBOW, LONG (97403) 13200E5350										
	1514	Ch col 3	X2	O			ELBOW, SHORT (97403) 13200E5353										
	1515	Ch col 3	X2	O			END; CAP (97403) 13200E5347										
	1516	Ch col 3	X2	O			NOZZLE HEAD (97403) 13200E5342										

Page	Line	Action	1 Source maintenance and recoverability code: Source	Maintenance	Recoverability	2 Federal stock No.	3 Description	4 Unit of issue	5 Qty inc in unit pack	6 Qty inc in unit	7 30-day DS/GS maint. allowance: 1-20	21-50	51-100	8 1 yr alw per 100 equip cntgcy planing purposes	9 Depot maint alw per 100 equip	10 Illustrations: Figure No.	Item or symbol No.
86	1517	Ch col 3	X2	O			SCREW, TOGGLE:*** (97403) 13200E5359										
	1518	Ch col 2	X2	O		3740-977-8672	NOZZLE ASSEMBLY: * * *										
							GROUP 57 — SPRAY EQUIPMENT COMPONENTS										
							5704 — SPRAY DUCTS AND MANIFOLDS										
91	1670	Add col lc ch Col 3	X2	O	R		MANIFOLD SPRAY ASSEMBLY (97403) 13200E5341										
	1671	Ch col 3	X2	O			CLAMP, DRUM (97403) 13200E5358										
	1672	Ch col 3	X2	O			ELBOW, LONG (97403) 13200E5350										
	1673	Ch col 3	X2	O			ELBOW, SHORT (97403) 13200E5353										
	1674	Ch col 3	X2	O			END CAP (97403) 13200E5347										
	1675	Ch col 3	X2	O			NOZZLE HEAD (97403) 13200E5342										
	1676	Ch col 3	X2	O			SCREW, TOGGLE:*** (97403) 13200E5359										
							GROUP 76 — FIRE FIGHTING EQUIPMENT COMPONENTS										
							7603 — FIRE EXTINGUISHERS										
96	1838	Add col 2	X2	O		5310-584-5005	NUT, PLAIN, HEXAGON: * * *										
							GROUP 57 — SPRAY EQUIPMENT COMPONENTS										
							5704 — SPRAY DUCTS AND MANIFOLDS										
101	1974	Ch col 1B	X2	F			NOZZLE ASSEMBLY: * * * (82254) CFA40961										

			1			2	3	4	5	6	7			8	9	10	
Page	Line	Action	Source maintenance and recoverability code			Federal stock No.	Description	Unit of issue	Qty inc in unit pack	Qty inc in unit	30-day DS/GS maint. allowance			1 yr alw per 100 equip cntgcy planing purposes	Depot maint alw per 100 equip	Illustrations	
			Source	Maintenance	Recoverability						1-20	21-50	51-100			Figure No.	Item or symbol No.
101	1980	Ch col 1B	X2	F			BODY: * * * (82254) CFR 41535-1										
	1981	Ch col 1B	X2	F			CLAMP ASSEMBLY: * * * (82254) CFB55020										
	1982	Ch col 1B	X2	F			COVER: * * * (82254) CFR41535-5										
	1983	Ch col 1B	P	F		5330-956-4306	GASKET, LONG: * * * (82254) CFA41537										
	1984	Ch col 1B	P	F		5330-925-0455	GASKET, SHORT: * * * (82254) CFA41538										
	1985	Ch col 1B	X2	F			NOZZLE HEAD ASSEMBLY: * * * (82254) CFR41536										
	1986	Ch col 1B	X2	F			SCREW, MACHINE:*** (82254) CFA41100										
	1987	Ch col 1B	X2	F			WASHER, LOCK: * * * (96906) MS35333-25										
							All changes, additions or deletions of Federal Stock Numbers or Manufacturers part numbers should be appriopriately reflected in the parts listing and index of the manual.										

By Order of the Secretary of the Army:

W. C. WESTMORELAND,
General, United States Army,
Chief of Staff.

Official:

VERNE L. BOWERS,
Major General, United States Army,
The Adjutant General.

Distribution:

To be distributed in accordance with DA Form 12-25A (qty rqr Block No. 150), Organizational maintenance requirements for Insect and Pest Control.

Changes in force: C 2 and C 3

TM 5-3740-200-25P
C 3

Change No. 3

HEADQUARTERS
DEPARTMENT OF THE ARMY
Washington, D.C., *20 November 1972*

Organizational, Direct and General Support, and Depot Maintenance Repair Parts and Special Tools List

SPRAYER, INSECTICIDE, SKID MOUNTED: GASOLINE DRIVEN; 40 GAL PER HOUR; FOG (CURTIS AUTOMOTIVE DEVICES MODEL CFR-40000) FSN 3740-790-6188

Current as of 1 November 1972

TM 5-3740-200-25P, 10 April 1967 is changed as follows:

Page 12. Section III, Part I is changed as follows:

Page	Line	Action	(1) SMR Code	(2) Federal stock No.	(3) Description: Reference No. & Mfr. Code	(3) Description: Usable on Code	(4) Unit of Issue	(5) Qty Inc in Unit Pack	(6) Qty Inc in Unit	(7) 15 Day Organizational Maint Allowances (a) 1–5	(b) 6–20	(c) 21–50	(d) 51–100	(8) Illustrations (a) Figure No.	(b) Item or Symbol No.
12	0659	Delete FSN in col 2, chg P/N as shown			SHIM***	B13200E5420–2									
13	0714	Delete FSN in col 2			TUBE***										

Page 46. Section IV, Part I is changed as follows:

Page	Line	Action	(1) SMR Code	(2) Federal stock No.	(3) Description: Reference No. & Mfr. Code	(3) Description: Usable on Code	(4) Unit of Issue	(5) Qty Inc in Unit Pack	(6) Qty Inc in Unit	(7) 30-Day DS Maint Allowance (a) 1–20	(7) (b) 21–50	(7) (c) 51–100	(8) 30-Day GS Maint Allowance (a) 1–20	(8) (b) 21–50	(8) (c) 51–100	(9) 1-Yr Alw per 100 Equip Cntgcy	(10) Illustration (a) Fig No.	(10) (b) Item No.
46	0104	Chg FSN in col 2		5365–374–9707	RING***													
61	0659	Delete FSN in col 2, chg P/N as shown			SHIM***	B13200E5420–2												
63	0714	Delete FSN in col 2			TUBE***													
	0726	Chg FSN in col 2, chg P/N in col 3		5310–835–7478	NUT***	MS35691–611												

By Order of the Secretary of the Army:

CREIGHTON W. ABRAMS
General, United States Army
Chief of Staff

Official:

VERNE L. BOWERS
Major General, United States Army
The Adjutant General

Distribution:

To be distributed in accordance with DA Form 12-25A, (qty rqr block No. 150) Organizational maintenance requirements for Insect and Pest Control.

TECHNICAL MANUAL
No. 5-3740-200-25P

HEADQUARTERS
DEPARTMENT OF THE ARMY
WASHINGTON, D. C., *10 April 1967*

Organizational, Direct And General Support, And Depot Maintenance Reparts Parts and Special Tools List

SPRAYER, INSECTICIDE, SKID MOUNTED: GASOLINE DRIVEN; 40 GAL PER HOUR; FOG (CURTIS AUTOMOTIVE DEVICES MODEL CFR-40000)

FSN 3740-790-6188

		Paragraph	Page
SECTION I.	INTRODUCTION		
	Scope	1	ix
	General	2	ix
	Explanation of columns	3	ix
	Instructions for locating repair parts	4	xi
	Abbreviations	5	xi
	Special information	6	xi
	Index of Federal Supply Codes	7	xi
	Reporting of equipment publication improvements	8	xii
SECTION II.	PRESCRIBED LOAD ALLOWANCE		
SECTION III.	REPAIR PARTS FOR ORGANIZATIONAL MAINTENANCE		
Part I.			
Group 01.	Engine		
	0100 Engine assembly		1
	0101 Crankcase, block, cylinder head		1
	0102 Crankshaft		1
	0103 Flywheel assembly		1
	0105 Valves, camshafts and timing system		2
	0106 Engine lubrication system		2
	0107 Engine starting system		2
	0108 Manifolds		2
03.	Fuel System		
	0301 Carburetor		3
	0302 Fuel pumps		3
	0304 Air cleaner		3
	0306 Tanks, lines, fittings		4
	0308 Engine speed governor and controls		5
	0311 Engine starting aids		5
	0312 Throttle or choke controls		5
04.	Exhaust System		
	0401 Muffler and pipes		6
05.	Cooling System		
	0502 Deflectors, shrouds		6
06.	Electrical System		
	0601 Generator		7
	0602 Generator regulator		7

*This manual supersedes TM 5-3740-200-25P, 1 December 1961, including C1, 13 May 1963.

Page

0603 Starting motor 7
0606 Engine safety controls 8
0607 Instrument or engine control panel 9
0612 Batteries, storage 9
0615 Radio interference suppression 10
18. Body, Cab, Hood and Hull
1801 Body, cab, hood 11
1808 Straps 11
22. Body, Chassis or Hull, and Accessory Items
2201 Canvas items 11
2210 Data plates 12
47. Gages (Non-Electrical), Weighing and Measuring Devices
4702 Gages, lines and fittings 12
55. Pumps
5500 Pump assembly 13
5505 Suction or discharge system 14
5507 Pump drive 14
57. Spray Equipment
5703 Air blower assembly 14
5707 Instrument panel 15
5708 Tanks, valves, lines, hoses, fittings, and liquid strainer 18
95. General Use Standardized Parts
9501 Bulk material 15
99. Parts Peculiar
9901 Multi-listed parts 19
Part II.
Group 01. Engine
0102 Crankshaft 20
0106 Engine lubrication system 20
03. Fuel System
0309 Fuel filters 20
06. Electrical System
0605 Ignition components 21
22. Body, Chassis or Hull and Accessory Items
2210 Data plates 23
57. Spray Equipment Components
5703 Air blower assembly 23
5704 Spray ducts and manifolds 23
95. General Use Standardized Parts
9501 Bulk material 23
Part III.
Group 01. Engine
0100 Engine assembly 24
0102 Crankshaft 24
0106 Engine lubrication system 24
03. Fuel System
0306 Tanks, lines, fittings 24
0309 Fuel filters 25
04. Exhaust System
0401 Muffler and pipes 25
06. Electrical System
0605 Ignition components 25
22. Body Chassis or Hull, and Accessory Items
2210 Data plates 26
57. Spray Equipment Components
5703 Air blower assembly 26
5704 Spray ducts and manifolds 27
5708 Tanks, valves, lines, hoses, fittings, and liquid strainers 27
95. General Use Standardized Parts
9501 Bulk material 27

Page

Part IV.
Group 01. Engine
0102 Crankshaft ---- 28
0106 Engine lubrication system ---- 28
03. Fuel System
0309 Fuel filters ---- 28
06. Electrical System
0605 Ignition components ---- 29
22. Body Chassis or Hull and Accessory Items
2210 Data plates ---- 30
57. Spray Equipment Components
5703 Air blower assembly ---- 31
5704 Spray ducts and manifolds ---- 31
76. Fire Fighting Equipment Components
7603 Fire extinguishers ---- 31
95. General Use Standardized Parts
9501 Bulk material ---- 31

Part V.
Group 01. Engine
0100 Engine assembly ---- 32
0102 Crankshaft ---- 32
0106 Engine lubrication system ---- 32
03. Fuel System
0306 Tanks, lines, fittings ---- 32
0309 Fuel filters ---- 33
04. Exhaust System
0401 Muffler and pipes ---- 33
06. Electrical System
0605 Ignition components ---- 33
22. Body Chassis or Hull and Accessory Items
2210 Data plates ---- 34
57. Spray Equipment Components
5703 Air blower assembly ---- 34
5704 Spray ducts and manifolds ---- 34
5708 Tanks, valves, lines hoses, fittings and liquid strainers ---- 35

Part VI.
Group 01. Engine
0101 Crankcase, block, cylinder head ---- 36
0102 Crankshaft ---- 36
0106 Engine lubrication system ---- 36
03. Fuel System
0309 Fuel filters ---- 36
06. Electrical System
0605 Ignition components ---- 37
22. Body Chassis or Hull and Accessory Items
2210 Data plates ---- 38
57. Spray Equipment Components
5703 Air blower assembly ---- 38
5704 Spray ducts and manifolds ---- 38
76. Fire Fighting Equipment Components
7603 Fire extinguishers ---- 39

Part VII.
Group 01. Engine
0101 Crankcase, block, cylinder head ---- 40
0102 Crankshaft ---- 40
0106 Engine lubrication system ---- 40
03. Fuel System
0309 Fuel filters ---- 40
06. Electrical System
0605 Ignition components ---- 41

Page

22. Body Chassis or Hull and Accessory Items
2210 Data plates ---- 42
57. Spray Equipment Components
5703 Air blower assembly ---- 42
5704 Spray ducts and manifolds ---- 42

SECTION IV. REPAIR PARTS FOR DS, GS, AND DEPOT MAINTENANCE

Part I. Engine
Group 01. 0100 Engine assembly ---- 43
0101 Crankcase, block, cylinder head ---- 43
0102 Crankshaft ---- 44
0103 Flywheel assembly ---- 46
0104 Pistons, connecting rods ---- 46
0105 Valves, camshafts and timing system ---- 47
0106 Engine lubrication system ---- 48
0107 Engine starting system ---- 49
0108 Manifolds ---- 49
03. Fuel System
0301 Carburetor ---- 50
0302 Fuel pump ---- 50
0304 Air cleaner ---- 50
0306 Tanks, lines, fittings ---- 51
0308 Engine speed governor and controls ---- 52
0311 Engine starting aids ---- 53
0312 Throttle or choke controls ---- 53
04. Exhaust System
0401 Muffler and pipes ---- 53
05. Cooling System
0502 Deflectors, shrouds ---- 54
06. Electrical System
0601 Generator ---- 54
0602 Generator regulator ---- 56
0603 Starting motor ---- 56
0606 Engine safety controls ---- 58
0607 Instrument or engine control panel ---- 58
0612 Batteries, storage ---- 58
0615 Radio interference suppression ---- 59
15. Frame
1501 Frame assembly ---- 60
18. Body, Cab, Hood and Hull
1801 Body, cab, hood ---- 60
1808 Straps ---- 61
22. Body, Chassis or Hull, and Accessory Items
2201 Canvas items ---- 61
2210 Data plates ---- 61
47. Gages (Non-Electrical), Weighing and Measuring Devices
4702 Gages, lines and fittings ---- 62
55. Pumps
5500 Pump assembly ---- 63
5501 Shafts, rotors ---- 63
5505 Suction or discharge system ---- 64
5507 Pump drive ---- 64
57. Spray Equipment
5703 Air blower assembly ---- 64
5707 Instrument panel ---- 66
5708 Tanks, valves, lines, hoses, fittings, and liquid strainer ---- 67
95. General Use Standardized Parts
9501 Bulk material ---- 70
99. Parts Peculiar
9901 Multi-listed parts ---- 70

Page

Part II.
Group 01. Engine
0100 Engine assembly ---- 71
0101 Crankcase, block, cylinder head ---- 71
0102 Crankshaft ---- 71
0105 Valves, camshafts and timing system ---- 71
0106 Engine lubrication system ---- 71
03. Fuel System
0309 Fuel filters ---- 72
05. Cooling System
0502 Deflectors, shrouds ---- 72
06. Electrical System
0605 Ignition components ---- 72
22. Body, Chassis or Hull and Accessory Items
2210 Data plates ---- 74
57. Spray Equipment Components
5703 Air blower assembly ---- 75
5704 Spray ducts and manifolds ---- 75
95. General Use Standardized Parts
9501 Bulk material ---- 75

Part III.
Group 01. Engine
0100 Engine assembly ---- 76
0101 Crankcase, block, cylinder head ---- 76
0102 Crankshaft ---- 76
0105 Valves, camshafts and timing system ---- 76
0106 Engine lubrication system ---- 76
03. Fuel System
0306 Tanks, lines, fittings ---- 77
0309 Fuel filters ---- 77
04. Exhaust System
0401 Muffler and pipes ---- 77
05. Cooling System
0502 Deflectors, shrouds ---- 77
06. Electrical System
0605 Ignition components ---- 78
22. Body Chassis or Hull, and Accessory Items
2210 Data plates ---- 80
57. Spray Equipment Components
5703 Air blower assembly ---- 80
5704 Spray ducts and manifolds ---- 80
5708 Tanks, valves, lines, hoses, fittings and liquid strainers ---- 81
95. General Use Standardized Parts
9501 Bulk material ---- 81

Part IV.
Group 01. Engine
0100 Engine assembly ---- 82
0101 Crankcase, block, cylinder head ---- 82
0102 Crankshaft ---- 82
0105 Valves, camshafts and timing system ---- 82
0106 Engine lubrication system ---- 82
03. Fuel System
0309 Fuel filters ---- 83
05. Cooling System
0502 Deflectors shrouds ---- 83
06. Electrical System
0605 Ignition components ---- 83
22. Body Chassis or Hull and Accessory Items
2210 Data plates ---- 85

Page

57. Spray Equipment Components
5703 Air blower assembly ---- 86
5704 Spray ducts and manifolds ---- 86
76. Fire Fighting Equipment Components
7603 Fire extinguishers ---- 86
95. General Use Standardized Parts
9501 Bulk material ---- 86
Part V.
Group 01. Engine
0100 Engine assembly ---- 87
0101 Crankcase, block, cylinder head ---- 87
0102 Crankshaft ---- 87
0105 Valves, camshafts and timing system ---- 87
0106 Engine lubrication system ---- 87
03. Fuel System
0306 Tanks, lines, fittings ---- 88
0309 Fuel filters ---- 88
04. Exhaust System
0401 Muffler and pipes ---- 88
05. Cooling System
0502 Deflectors, shrouds ---- 88
06. Electrical System
0605 Ignition components ---- 89
22. Body Chassis or Hull and Accessory Items
2210 Data plates ---- 90
57. Spray Equipment Components
5703 Air blower assembly ---- 91
5704 Spray ducts and manifolds ---- 91
5708 Tanks, valves, lines hoses, fittings and liquid strainers ---- 91
Part VI.
Group 01. Engine
0100 Engine assembly ---- 92
0101 Crankcase, block, cylinder head ---- 92
0102 Crankshaft ---- 92
0105 Valves, camshafts and timing system ---- 92
0106 Engine lubrication system ---- 92
03. Fuel System
0309 Fuel filters ---- 93
05. Cooling System
0502 Deflectors, shrouds ---- 93
06. Electrical System
0605 Ignition components ---- 93
22. Body Chassis or Hull and Accessory Items
2210 Data plates ---- 95
57. Spray Equipment Components
5703 Air blower assembly ---- 95
5704 Spray ducts and manifolds ---- 96
76. Fire Fighting Equipment Components
7603 Fire extinguishers ---- 96
Part VII.
Group 01. Engine
0100 Engine assembly ---- 97
0101 Crankcase, block, cylinder head ---- 97
0102 Crankshaft ---- 97
0105 Valves, camshafts and timing system ---- 97
0106 Engine lubrication system ---- 97
03. Fuel System
0309 Fuel filters ---- 98
05. Cooling System
0502 Defle[illegible] ---- 98

Pa

06. Electrical System
0605 Ignition components ---------- 9
22. Body Chassis or Hull and Accessory Items
2210 Data plates ---------- 10
57. Spray Equipment Components
5703 Air blower assembly ---------- 10
5704 Spray ducts and manifolds ---------- 10
SECTION V. FEDERAL STOCK NUMBER AND PART NUMBER INDEX ---------- 14

SECTION I

INTRODUCTION

1. Scope

This manual contains a list of repair parts required for the performance of organizational, direct support, general support, and depot maintenance of the sprayer.

2. General

This repair parts list is divided into five principal sections, including a Federal stock number index.

a. Section II, Prescribed Load Allowance List (PLA), is a consolidated listing of repair parts quantitatively allocated for initial stockage at the organizational level. This is a mandatory minimum stockage allowance.

b. Section III, Repair Parts List, is a list of repair parts authorized for the performance of maintenance at the organizational level.

c. Section IV, Repair Parts List, is a list of repair parts authorized for the performance of maintenance at direct support, general support, and depot level.

d. Section V, Federal Stock Number and Manufacturer's Part Number Index, is an index of Federal stock numbers and manufacturer's part numbers to page and manufacturer's codes.

e. Part I applies to repair parts peculiar to all end items. Part II applies to repair parts peculiar to Serial No. range 101 through 148 only. Part III applies to repair parts peculiar to Serial No. range 151 through 165 only.

Part IV applies to repair parts peculiar to Serial No. range 166 through 186 only. Part V applies to repair parts peculiar to Serial No. range 201 through 245. Part VI applies to repair parts peculiar to Serial No. range 65-301 through 65-360. Part VII applies to repair parts peculiar to Serial No. range 65-361 through 65-465.

3. Explanation of Columns

The following provides an explanation of columns in the tabular lists.

a. Source, Maintenance, and Recoverability Codes.

(1) Source Code indicates the selection status and source for the listed item. Source codes used are:

Code	Explanation
P	Applied to repair parts which are stocked in or supplied from DSA/GSA or Army supply system, and authorized for use at indicated maintenance categories.
M	Applied to repair parts which are not procured or stocked but are to be manufactured at indicated maintenance categories.
A	Applied to assemblies which are not procured or stocked as such but made up of two or more units, each of which carry individual stock numbers and descriptions and are procured and stocked and can be assembled by units at indicated maintenance categories.
X1	Applied to repair parts which are not procured or stocked, the requirement for which will be supplied by use of the next higher assembly or components.
X2	Applied to repair parts which are not stocked. The indicated maintenance category requiring such repair parts will attempt to obtain them through cannibalization; if not obtainable through cannibalization, such repair parts will be requisitioned with supporting justification through normal supply channels.
C	Applied to repair parts authorized for local procurements. If not obtainable from local procurement, such repair parts will be requisitioned through normal supply channels with a supporting statement of nonavailability from local procurement.

Note: Source code is not shown on common hardware items known to be readily available in Army supply channels and through local procurement.

(2) Maintenance Code indicates the lowest category of maintenance authorized to maintain the listed item. The maintenance level codes are:

Code	Explanation
O	Organizational maintenance
F	Direct support maintenance
H	General support maintenance
D	Depot maintenance

(3) Rcoverability Code indicates whether unserviceable items should be returned for recovery or salvage. Items not coded are expendable. Recoverability code is:

Code	Explanation
R	Applied to repair parts and assemblies which are economically repairable at DSU and GSU activities and normally are furnished by supply on an exchange basis.

b. Federal Stock Number indicates the Federal stock number for the item.

c. Description column indicates the Federal item name and a brief description of the item. A five-digit manufacturer's or other service code is shown in parentheses followed by the manufacturer's part number. Repair parts quantities included in kits, sets, and assemblies that differ from the actual quantity used in the specific item, are listed in parentheses following the repair part name.

d. Unit of Issue indicates the unit used as a basis of issue, e.g., ea, pr, ft, yd, etc.

e. Quantity Incorporated in Unit Pack indicates the actual quantity contained in the unit pack.

f. Quantity Incorporated in Unit indicates the actual number of parts used in the application. A zero is shown when components of kits or sets are listed that are not applicable to the specific end item.

g. Fifteen-Day Organizational Maintenance Allowance.

(1) The allowance columns are divided into four subcolumns. Indicated in in each subcolumn is the quantity of items authorized for the number of equipments supported. Items authorized for use as required but not for initial stockage are identified with an asterisk in the allowance column.

(2) The quantitative allowances for organizational level of maintenance represents one initial prescribed load for a 15-day period for the number of equipments supported. Units and organizations authorized additional prescribed loads will multiply the number of prescribed loads authorized by the quantity of repair parts reflected in the appropriate density column to obtain the total quantity of repair parts authorized.

(3) Items identified by an asterisk may by requisitioned as required. Subsequent changes and/or additions to allowances will be limited to the provisions of AR 735-35. The range of items authorized will be made by this Command based upon engineering experience, demand data, or TAERS information.

(4) Allowances are based on 600 hours of operation per year.

h. Thirty-Day DS/GS Maintenance Allowance.

(1) The allowance columns are divided into three subcolumns. Indicated in each subcolumn is the quantity of items authorized for a number of equipments supported. Items authorized for use as required but for initial stockage are identified with an asterisk is the allowance column.

(2) The quantitative allowances for DS/GS levels of maintenance will represent initial stockage for a 30-day period for the number of equipments supported.

i. One-Year Allowances Per 100 Equipments/Contingency Planning Purposes indicates the quantity of items required for distribution and contingency planning purposes.

j. Depot Maintenance Allowance Per 100 Equipments indicates the total quantity of items recommended for depot maintenance of 100 equipments. Items recommended for immediate use only are identified with an asterisk in the allowance column.

k. Illustration.

(1) Figure Number indicates the figure number of the illustration in which the item is shown.

(2) Item or Symbol Number indicates the callout number used to reference the item in the illustration.

4. Special Information

The following publications pertain to the sprayer and its components.

TM 5-3740-200-15	Operator, Organizational, Field and Depot Maintenance Manual
LO 5-3740-200-15	Lubrication Order

5. Instructions for Locating Repair Parts

a. When Federal stock number or manufacturer's part number is unknown.

(1) *First.* Using the index of contents, determine the functional group or subgroup, i.e., engine, engine assembly, transmission, transmission assembly, within which the repair part belongs. Locate the appropriate page in the manual and identify the part.

(2) *Second.* Locate the repair part and the illustration figure and item number as shown in the last two columns of the repair parts listing.

(3) *Third.* Identify the repair part on the illustration.

b. When Federal stock number or manufacturer's part number is known.

(1) *First.* Use the index to locate the Federal stock number or manufacturer's part number. This index is arranged in alphameric sequence cross-referenced to page number and manufacturer's code.

(2) *Second.* Refer to the appropriate page in the parts listing. Locate the repair part and the illustration figure and item number as shown in the last two columns of the parts listing.

6. Abbreviations

amp	ampere(s)
AWG	American Wire Gage
dc	direct current
dia	diameter(s)
ea	each
ft	foot(feet)
grp	group
id	inside diameter(s)
in.	inch(es)
lg	length(long)
mm	millimeter
mtg	mounting(s)
No.	number(s)
od	outside diameter
sh	sheet
thd	thread(ed)
thk	thick(ness)
thru	through
uf	microfarad(s)
v	volt(s)
w	wide(width)
w/	with

7. Index of Federal Supply Codes

Code	Manufacturers
00736	Air-Maze Corp.
01510	Miehle-Dexter Super Charger Div. of Christensen Machine Co., Inc.
04255	Weatherhead Co.
04959	Autovent Fan & Blower Div. of Nelson Herman Corp. Moline, Inc.
09058	Brown & Sharpe Mfg. Co.
11583	Champion Spark Plug Co.
19728	Prestolite Co.
22375	Fischer and Porter Co.
23838	Fyr-Fyter Co., Inc.
30327	Imperial Brass Mfg. Co.
60038	Timken Roller Bearing Co.
61976	United Specialties Co.
66289	Wisconsin Motor Corp.
70470	Astrup Company
70655	Auto Vehicle Parts Co.
70903	Belden Mfg. Co.
71176	Browning Mfg. Co., Inc.
71956	Dodge Mfg. Co.
72850	Eclipse Machine Div. of Bendix Corp.
72987	Estwing Mfg. Co.
73370	Fram Corp.
77060	Packard Electric Div. of General Motors Corp.
78480	Tillotson Mfg. Co.
79470	The Weatherhead Co.
79575	Wico Electric Co.
79960	Zenith Carburetor Div. of Bendix Corp.
80124	Vibration Eliminator Co.
81336	Chief of Engineers
82247	Spraying Systems Co., Inc.

Code	Manufacturers
82254	Curtis Dyna-Products Corp.
82696	Mansure, E. L., Co.
82796	Fairbanks Morse & Co.
82797	Erie Forge & Steel Corp.
82976	Carrier Corp.
85274	Dwyer, F. W. Mfg. Co.
86906	Schuessler, William
87373	Z & W Manufacturing Corp.
92697	Patent Scaffolding Co., Inc.
93146	Buffalo Turbine Agricultural Equipment
95875	Hallett Mfg. Co.
96906	Military Standard
97296	Arjay Machine Co.
97403	Army Engineer Research & Development Laboratories

8. Reporting of Equipment Publication Improvements

DA Form 2028 (Recommended Changes to DA Publications) will be used for reporting discrepancies and recommendations for improving this equipment publication. This form will be completed by the individual using the manual and forwarded direct to Commanding General, U. S. Army Mobility Equipment Command, AMSME-MPD, 4300 Goodfellow Blvd., St. Louis, Mo. 63120.

SECTION II

PRESCRIBED LOAD ALLOWANCE

(1) Federal Stock Number	(2) Description	(3) 15-day org maint alw			
		(a) 1-5	(b) 6-20	(c) 21-50	(d) 51-100
	PART I GROUP 01 — ENGINE 0100 — ENGINE ASSEMBLY				
2805-720-4773	GASKET SET: engine overhaul (66289) Q214	*	2	2	4
	GROUP 03 — FUEL SYSTEM 0301 — CARBURETOR				
2910-807-7153	GASKET SET, CARBURETOR (79960) C181-329	*	2	2	4
	0302 — FUEL PUMP				
2910-776-7902	PUMP, FUEL (66289) LP42C	*	*	2	2
	GROUP 06 — ELECTRICAL SYSTEM 0601 — GENERATOR				
3030-528-4261	BELT, V: generator drive (71946) 4L250	*	*	2	2
	0602 — GENERATOR REGULATOR				
2920-785-6393	REGULATOR, VOLTAGE (19728) VB04201ET	*	*	2	2
	0603 — STARTING MOTOR				
1015-298-8702	GASKET: bracket mtg, copper	*	*	*	2
2920-710-6107	PARTS KIT, ELECTRICAL ENGINE STARTER (19728) K1T19728-36	*	*	*	2
	0615 — RADIO INTERFERENCE SUPPRESSION				
5910-127-7252	CAPACITOR: arature terminal on regulator to shield box (81347) ESC8071CA445	*	*	*	2
	GROUP 55 — PUMPS 5507 — PUMP DRIVE				
3030-542-3702	BELT, V: pump drive (71176) AP26	*	*	2	2
	GROUP 57 — SPRAY EQUIPMENT 5703 — AIR BLOWER ASSEMBLY				

(1) Federal Stock Number	(2) Description	(3) 15-day org maint alw			
		(a) 1-5	(b) 6-20	(c) 21-50	(d) 51-100
3030-246-0152	BELT, V: blower drive, matched set of 3 (71176) BP60-3	*	*	2	2
3740-542-3717	GASKET: intake and exhaust flange (01510) 7932	*	2	2	3
	GROUP 99 — PARTS PECULIAR 9901 — MULTI-LISTED PARTS				
2805-641-7404	GASKET	*	2	2	3
	PART II GROUP 01 — ENGINE 0106 — ENGINE LUBRICATION SYSTEM				
5330-289-0776	WASHER, NONMETALLIC: cover screw (73370) 10076	*	*	*	2
2940-529-2738	FILTER ELEMENT, FLUID, PRESSURE: oil (73370) 6946	2	7	13	25
5330-291-3405	WASHER, NONMETALLIC (73370) 10611	2	7	13	25
	GROUP 03 — FUEL SYSTEM 0309 — FUEL FILTERS				
2910-358-4317	BOWL, SEDIMENT FUEL: glass (78480) 07759	*	*	2	2
2910-282-7557	WASHER, NONMETALLIC: bowl mtg (78480) 08227	2	2	4	8
	GROUP 06 — ELECTRICAL SYSTEM 0605 — IGNITION COMPONENTS				
2920-712-1267	REPAIR KIT, MAGNETO (81336) 79575-4	*	2	2	3
2920-293-5212	SPARK PLUG: 18mm (11583) XED16	2	3	5	10
5330-599-5356	GASKET: spark plug (11583) A676	*	2	2	3
	5703 — AIR BLOWER ASSEMBLY				
3740-542-3716	GASKET: element to body and top (00736) 10M06	*	*	*	2
	PART III GROUP 01 — ENGINE 0106 — ENGINE LUBRICATION SYSTEM				
5330-298-0776	WASHER, NONMETALLIC: cover screw (73370) 10076	*	*	*	2
2940-141-9025	FILTER ELEMENT (73370) C21P2	2	7	13	25
5330-599-1285	GASKET, COVER WASHER, NONMETALLIC (73370) 11582	2	7	13	25
	GROUP 03 — FUEL SYSTEM 0309 — FUEL FILTERS				
2910-354-3834	BOWL, SEDIMENT, FUEL: glass (78480) 06137	*	*	2	2
5330-187-2962	WASHER, NONMETALLIC: bowl mtg (78480) 06096	2	2	4	8

(1) Federal Stock Number	(2) Description	(3) 15-day org maint alw			
		(a) 1–5	(b) 6–20	(c) 21–50	(d) 51–100
	GROUP 06 — ELECTRICAL SYSTEM 0605 — IGNITION COMPONENTS				
2920–844–2035	REPAIR KIT, MAGNETO (82796) SK72	*	2	2	3
2920–841–1890	SPARK PLUG (11583) XMD18	2	3	5	10
5330–599–5356	GASKET: spark plug (11583) A676	*	2	2	3
	GROUP 57 — SPRAY EQUIPMENT 5703 — AIR BLOWER ASSEMBLY				
3740–542–3716	GASKET: element to body and top (00736) 10M06	*	*	*	2
	PART IV GROUP 01 — ENGINE 0106 — ENGINE LUBRICATION SYSTEM				
5330–298–0776	WASHER, NONMETALLIC: cover screw (73370) 10076	*	*	*	2
2940–529–2738	FILTER ELEMENT, FLUID, PRESSURE: oil (73370) 6946	2	7	13	25
5330–291–3405	WASHER, NONMETALLIC: cover (73370) 10611	2	7	13	25
	GROUP 03 — FUEL SYSTEM 0309 — FUEL FILTERS				
2910–358–4317	BOWL, SEDIMENT, FUEL: glass (78480) 07759	*	*	2	2
2910–282–7557	WASHER, NONMETALLIC: bowl mtg (78480) 08227	2	2	4	8
	GROUP 06 — ELECTRICAL SYSTEM 0605 — IGNITION COMPONENTS				
2920–712–1267	REPAIR KIT, MAGNETO (81336) 79575–4	*	2	2	3
2920–293–5212	SPARK PLUG: 18 mm (11583) XED16	2	3	5	10
5330–599–5356	GASKET: spark plug (11583) A676	*	2	2	3
	GROUP 57—SPRAY EQUIPMENT 5703—AIR BLOWER ASSEMBLY				
3740–542–3716	GASKET: element to body and top (00736) 10M06	*	*	*	2
	PART V GROUP 01—ENGINE 0106—ENGINE LUBRICATION SYSTEM				
5330–298–0776	WASHER, NONMETALLIC: cover screw (73370) 10076	*	*	*	2
2940–141–9025	FILTER ELEMENT (73370) C21P2	2	7	13	25
5330–599–1285	GASKET, COVER WASHER, NONMETALLIC (73370) 11582	2	7	13	25
	GROUP 03—FUEL SYSTEM 0309—FUEL FILTERS				
2910–354–3834	BOWL, SEDIMENT: glass	*	*	2	2
5330–187–2962	WASHER, NONMETALLIC (78480) 06096	2	2	4	8

(1) Federal Stock Number	(2) Description	(3) 15-day org maint alw			
		(a) 1-5	(b) 6-20	(c) 21-50	(d) 51-100
	GROUP 06—ELECTRICAL SYSTEM 0605—IGNITION COMPONENTS				
2920-844-2035	REPAIR KIT, MAGNETO (82796) SK72	*	2	2	3
2920-841-1890	SPARK PLUG (11583) XMD18	2	3	5	10
5330-599-5356	GASKET: spark plug (11583) A676	*	2	2	3
	PART VI GROUP 01—ENGINE 0106—ENGINE LUBRICATION SYSTEM				
5330-298-0776	WASHER, NONMETALLIC: cover screw (73370) 10076	*	*	*	2
2940-141-9025	FILTER ELEMENT (73370) C21P2	2	7	13	25
5330-599-1285	GASKET, COVER WASHER, NONMETALLIC (73370) 11582	2	7	13	25
	GROUP 03—FUEL SYSTEM 0309—FUEL FILTERS				
2910-354-3834	BOWL, SEDIMENT: glass (78480) 06137	*	*	2	2
5330-187-2962	WASHER, NONMETALLIC: bowl mtg (78480) 06096	2	2	4	8
	GROUP 06—ELECTRICAL SYSTEM 0605—IGNITION COMPONENTS				
2920-844-2035	REPAIR KIT, MAGNETO (82796) SK72	*	2	2	3
2920-841-1890	SPARK PLUG (11583) XMD18	2	3	5	10
5330-599-5356	GASKET: spark plug (11583) A676	*	2	2	3
	PART VII GROUP 01—ENGINE 0106—ENGINE LUBRICATION SYSTEM				
5330-298-0776	WASHER, NONMETALLIC: cover screw (73370) 10076	*	*	*	2
2940-141-9025	FILTER ELEMENT (73370) C21P2	2	7	13	25
5330-599-1285	GASKET, COVER WASHER, NONMETALLIC (73370) 11582	2	7	13	25
	GROUP 03—FUEL SYSTEM 0309—FUEL FILTERS				
2910-354-3834	BOWL, SEDIMENT: glass (78480) 06137	*	*	2	2
5330-187-2962	WASHER, NONMETALLIC: bowl mtg (78480) 06096	2	2	4	8
	GROUP 06—ELECTRICAL SYSTEM 0605—IGNITION COMPONENTS				
2920-844-2035	REPAIR KIT, MAGNETO (82796) SK72	*	2	2	3
2920-841-1890	SPARK PLUG (11583) XMD18	2	3	5	10
5330-599-5356	GASKET: spark plug (11583) A676	*	2	2	3

LINE NO.	(1) SOURCE, MAINT. AND RECOV. CODE (a) SOURCE	(b) MAINT.	(c) RECOV.	(2) FEDERAL STOCK NUMBER	(3) DESCRIPTION	MANUFACTURER'S CODE	MANUFACTURER'S PART NUMBER	(4) UNIT OF ISSUE	(5) QTY INC IN UNIT PACK	(6) QTY INC IN UNIT	(7) 15 DAY ORG. MAINT. ALW. (a) 1-5	(b) 6-20	(c) 21-50	(d) 51-100	(8) ILLUSTRATION (a) FIG. NO.	(b) ITEM OR STM. NO.
0001					SECTION III - REPAIR PARTS FOR ORGANIZATIONAL MAINTENANCE PART I											
0002					GROUP 01 - ENGINE											
0002A					0100 - ENGINE ASSEMBLY											
0003	P	0		2805-720-4773	GASKET SET: ENGINE OVERHAUL	66289	Q21A	EA		1	*	2	2	4		
0022					0101 - CRANKCASE, BLOCK, CYLINDER HEAD											
0028		0		5305-049-9608	BOLT, MACHINE: CYLINDER HEAD MTG	66289	XD19	EA		15	*	*	*	*	2	18
0029		0		5306-207-9166	BOLT, MACHINE: CYLINDER HEAD MTG	66289	XD21	EA		1	*	*	*	*	2	12
0030		0		5306-021-5377	BOLT, MACHINE: SAFETY SWITCH AND CYLINDER HEAD			EA		1	*	*	*	*	2	9
0038		0		5315-753-3893	PIN, SPRING: PRIMER STOP	66289	PA332	EA		1	*	*	*	*	1	29
0041		0		4730-585-2359	PLUG, PIPE: CRANKCASE OIL HOLES	66289	PF18	EA		3	*	*	*	*	1	26
0044	X2	0		2910-347-5613	SPRING, HELICAL, TORSION: PRIMER HANDLE	66289	PM163A	EA		1	*	*	*	*	1	30
0047		0		5310-637-2400	WASHER, FLAT: CYLINDER HEAD MTG	66289	PH77A	EA		17	*	*	*	*	2	10
0051	X2	0		2805-718-6972	CYLINDER HEAD	66289	AB100B3S1	EA		1	*	*	*	*	2	8
0052	X1			5340-582-3078	INSERT, SPARK PLUG	66289	PH403A3	EA		2					2	7
0053					0102 - CRANKSHAFT											
0054		0		5305-206-1071	BOLT, MACHINE: BLOWER DRIVE SHEAVE	66289	XD17	EA		3	*	*	*	*	4	2
0055	X2	0			BUSHING, FLANGED: BLOWER DRIVE SHEAVE, 1 7/16 IN. ID	82254	CFR40089	EA		1	*	*	*	*	4	3
0068		0		5315-952-3107	KEY, MACHINE: BLOWER DRIVE SHEAVE			EA		1	*	*	*	*	3	8
0070	X2	0			NUT ASSEMBLY, CRANK	66289	UC75FS1	EA		1	*	*	*	*	4	14
0072	X1			5310-692-8335	NUT, CRANK	66289	UC75F	EA		1					4	13
0073		0		5315-276-5762	PIN, SPRING: CRANK NUT	66289	PA333	EA		1	*	*	*	*	4	12
0074		0		5315-271-3012	PIN, SPRING: SPRAY PUMP SHEAVE			EA		1	*	*	*	*	4	21
0082	X2	0			SHEAVE, CRANKSHAFT: SPRAY PUMP	81336	B13200E5435	EA		1	*	*	*	*	4	1
0087		0		5310-641-9308	WASHER, LOCK: CRANK NUT	66289	PE59	EA		1	*	*	*	*	4	18
0090					0103 - FLYWHEEL ASSEMBLY											
0091		0		5305-206-1071	BOLT, MACHINE: GENERATOR PULLEY TO FLYWHEEL	66289	XD17	EA		4	*	*	*	*	4	2
0095	X2	0			PULLEY, GENERATOR DRIVE	66289	MD292-4	EA		1	*	*	*	*	4	20
0096		0		5310-012-0214	WASHER, LOCK: GENERATOR PULLEY TO FLYWHEEL SCREW			EA		4	*	*	*	*	4	8

LINE NO.	(1) SOURCE, MAINT. AND RECOV. CODE (a) SOURCE	(b) MAINT.	(c) RECOV.	(2) FEDERAL STOCK NUMBER	(3) DESCRIPTION	MANUFACTURER'S CODE	MANUFACTURER'S PART NUMBER	(4) UNIT OF ISSUE	(5) QTY INC IN UNIT PACK	(6) QTY INC IN UNIT	(7) 15 DAY ORG. MAINT. ALW. (a) 1-5	(b) 6-20	(c) 21-50	(d) 51-100	(8) ILLUSTRATION (a) FIG. NO.	(b) ITEM OR SYM. NO.
0124					0105 - VALVES, CAMSHAFTS AND TIMING SYSTEM											
0128		0		5306-206-9166	BOLT, MACHINE: VALVE INSPECTION PLATE MOUNTING	66289	XD21	EA		1	*	*	*	*	2	12
0134		0		4730-278-3395	PLUG, PIPE: TIMING HOLE	66289	PF25	EA		1	*	*	*	*	8	12
0139	X1			1650-663-4816	GASKET: VALVE INSPECTION PLATE (COMPONENT OF GASKET SET, STOCK NO. 2805-720-4773, SEE GROUP 0100) (CAN BE MANUFACTURED FROM PAPER, STOCK NO. 5330-233-5845)	66289	QD612A	EA		2					2	14
0147	X2	0		2805-708-9195	PIN, SUPPORT: GOVERNOR ADJUSTING SCREW AND VALVE INSPECTION PLATE	66289	TC427B	EA		1	*	*	*	*	2	17
0149	X2	0		2805-360-8334	PLATE, VALVE, INSPECTION	66289	SA68	EA		2	*	*	*	*	2	15
0159		0		5310-221-3129	WASHER, FLAT: VALVE INSPECTION PLATE MOUNTING	66289	PH14	EA		2	*	*	*	*	2	16
0163					0106 - ENGINE LUBRICATION SYSTEM											
0175	X2	0		2805-560-9300	BREATHER ASSEMBLY	66289	L084C	EA		1	*	*	*	*	12	13
0178		0		4730-068-9388	ELBOW, PIPE: RETURN LINE TO BASE	04255	3400X2	EA		1	*	*	*	*	10	17
0179		0		4730-640-5832	ELBOW, PIPE TO TUBE: OIL FILTER OUTLET	79470	49X4	EA		1	*	*	*	*	10	19
0181	X2	0		2805-708-9194	FILLER AND GAGE ASSEMBLY: LUBE OIL	66289	R123	EA		1	*	*	*	*		
0182	X1			4510-919-3101	BODY, FILLER	66289	RB86	EA		1					1	24
0183	X1			6680-718-7016	GAGE AND CAP ASSEMBLY	66289	RJ152S1	EA		1					1	22
0184	X1			2805-919-3602	GASKET: OIL FILLER CAP (COMPONENT OF GASKET SET, STOCK NO. 2805-720-4773, SEE GROUP 0100)	66289	QD715	EA		1					1	23
0185	X2	0			NIPPLE, PIPE: FILLER GAGE	66289	LJ310	EA		1	*	*	*	*	1	25
0186	M	0			GASKET: BREATHER MTG MANUFACTURE FROM:	66289	QD669	EA		1					12	12
0202A	P	0		5330-270-8469	PAPER, GASKET (2 IN. X 2 IN. REQUIRED)			YD			SEE GRP 9501					
0211	P	0		2940-542-3807	LINE ASSEMBLY, OIL: RETURN	66289	RM1319G	EA		1	*	*	*	*	10	18
0212		0		4730-278-6337	PLUG, PIPE: OIL DRAIN	66289	XK7A	EA		1	*	*	*	*	11	5
0227					0107 - ENGINE STARTING SYSTEM											
0228	X2	0			CRANK, HAND	97403	13200E5436	EA		1	*	*	*	*	4	17
0229					0108 - MANIFOLDS											
0230		0		5310-776-8112	CLAMP WASHER: INTAKE AND EXHAUST MANIFOLD MTG	66289	PH356	EA		2	*	*	*	*	16	3
0231	X1			2805-366-6270	GASKET: EXHAUST MANIFOLD MTG (COMPONENT OF GASKET SET, STOCK NO. 2805-720-4773, SEE GROUP 0100)	66289	QB75	EA		2					17	7

LINE NO.	(1) SOURCE, MAINT. AND RECOV. CODE (a) SOURCE	(b) MAINT.	(c) RECOV.	(2) FEDERAL STOCK NUMBER	(3) DESCRIPTION	MANUFACTURER'S CODE	MANUFACTURER'S PART NUMBER	(4) UNIT OF ISSUE	(5) QTY INC IN UNIT PACK	(6) QTY INC IN UNIT	(7) 15 DAY ORG. MAINT. ALW. (a) 1-5	(b) 6-20	(c) 21-50	(d) 51-100	(8) ILLUSTRATION (a) FIG. NO.	(b) ITEM OR SYM. NO.
0232	X1			2805-366-6270	GASKET: INTAKE MANIFOLD MTG (COMPONENT OF GASKET SET, STOCK NO. 2805-720-4773, SEE GROUP 0100)	66289	QB75	EA		1					16	6
0233	X2	0		2805-353-5889	MANIFOLD, EXHAUST	66289	LD242	EA		1	*	*	*	*	17	6
0234	X2	0		2805-776-8111	MANIFOLD, INTAKE	66289	LC266A	EA		1	*	*	*	*	16	5
0235		0		5310-012-6189	NUT, PLAIN, HEXAGON: INTAKE AND EXHAUST MANIFOLD MTG			EA		2	*	*	*	*	16	1
0236		0		4730-187-4200	PLUG, PIPE: INTAKE MANIFOLD	66289	XK1	EA		1	*	*	*	*	16	28
0236A		0		5307-011-2572	STUD, PLAIN: MANIFOLD MTG	66289	PC110	EA		2	*	*	*	*	6	12
0237		0		5310-637-9541	WASHER, LOCK: INTAKE AND EXHAUST MANIFOLD MTG			EA		2	*	*	*	*	16	2
0238					GROUP 03 - FUEL SYSTEM											
0238A					0301 - CARBURETOR											
0239		0		5306-018-0078	BOLT, MACHINE: CARBURETOR MTG			EA		2	*	*	*	*	16	4
0240	P	0		2910-715-5328	CARBURETOR, FLOAT (INCLUDES COMPONENTS OF GASKET SET, STOCK NO. 2910-807-7153)	66289	L63L	EA		1	*	*	*	*	16	23
0241		0		4730-287-3281	PLUG, PIPE: CARBURETOR BOWL DRAIN			EA		1	*	*	*	*	16	22
0242	X1			2910-358-4787	GASKET: CARBURETOR MTG (COMPONENT OF GASKET SET, STOCK NO. 2805-720-4773, SEE GROUP 0100) (CAN BE MANUFACTURED FROM PAPER, STOCK NO. 5330-233-5847)	66289	QC58A	EA		1					16	26
0243	P	0		2910-807-7153	GASKET SET, CARBURETOR	79960	C181-329	EA		1	*	2	2	4		
0244	X1				GASKET: BOWL TO BODY	79960	C142-74	EA		1					16	24
0249		0		5310-596-4911	WASHER, LOCK: CARBURETOR MTG	66289	PE4	EA		2	*	*	*	*	16	29
0250					0302 - FUEL PUMPS											
0251	X1			2910-776-7900	GASKET: FUEL PUMP MTG (COMPONENT OF GASKET SET, STOCK NO. 2805-720-4773, SEE GROUP 0100) (CAN BE MANUFACTURED FROM PAPER, STOCK NO. 5330-233-5845)	66289	QD670	EA		1					16	10
0252	P	0		2910-776-7902	PUMP, FUEL	66289	LP42C	EA		1	*	*	2	2	16	9
0253		0		5305-068-0502	SCREW, CAP, HEXAGON HEAD: FUEL PUMP MTG			EA		2	*	*	*	*	16	15
0254		0		5310-261-7341	WASHER, LOCK: FUEL PUMP MTG	66289	PE3	EA		2	*	*	*	*	16	14
0255					0304 - AIR CLEANER											
0256	X2	0		2940-695-8797	AIR, CLEANER	66289	LO-83	EA		1	*	*	*	*	12	7
0257	X1				CUP ASSEMBLY, OIL	61976	176B8	EA		1					12	5
0258	X1				FILTER AND CAP	61976	179B3	EA		1					12	3

LINE NO.	(1) SOURCE, MAINT. AND RECOV. CODE (a) SOURCE	(b) MAINT.	(c) RECOV.	(2) FEDERAL STOCK NUMBER	(3) DESCRIPTION	MANUFACTURER'S CODE	MANUFACTURER'S PART NUMBER	(4) UNIT OF ISSUE	(5) QTY INC IN UNIT PACK	(6) QTY INC IN UNIT	(7) 15 DAY ORG. MAINT. ALW. (a) 1-5	(b) 6-20	(c) 21-50	(d) 51-100	(8) ILLUSTRATION (a) FIG. NO.	(b) ITEM OR SYM. NO.
0259	P	0		5330-292-0320	GASKET: CAP AND FILTER MTG, FIBER	61976	615A1	EA		1	*	*	*	*	12	4
0260	P	0		2940-366-9747	GASKET: FILTER MTG, CORK	61976	A7419	EA		1	*	*	*	*	12	6
0261		0		5306-531-1798	BOLT, MACHINE: BRACKET MTG			EA		2	*	*	*	*	12	10
0262	X2	0		2940-374-3084	BRACKET ASSEMBLY, AIR CLEANER	66289	B1-286S1	EA		1	*	*	*	*	12	9
0263	X2	0		4730-202-7766	CLAMP, HOSE: HOSE TO CARBURETOR RETAINING	66289	LK11	EA		2	*	*	*	*	12	15
0264	X1			2940-774-4747	GASKET: AIR CLEANER BRACKET MTG (COMPONENT OF GASKET SET, STOCK NO. 2805-720-4773, SEE GROUP 0100) (CAN BE MANUFACTURED FROM PAPER, STOCK NO. 5330-233-5846)	66289	QD667	EA		1					12	14
0265	M	0			HOSE, PREFORMED, RUBBER: AIR CLEANER TO CARBURETOR	66289	LL125	EA		1					12	16
					MANUFACTURE FROM:											
0265A	P	0		4720-218-5644	HOSE, RUBBER (12 IN. REQUIRED)			FT			SEE GRP 9501					
0266		0		5310-366-6163	NUT, PLAIN, WING: AIR CLEANER COVER, SELF-LOCKING	66289	PD147	EA		1	*	*	*	*	12	1
0267		0		5307-025-7993	STUD: AIR CLEANER MTG STEEL	66289	PC447	EA		1	*	*	*	*	12	8
0268		0		5310-543-2705	WASHER, LOCK: AIR CLEANER COVER MTG			EA		1	*	*	*	*	12	2
0269		0		5310-596-4911	WASHER, LOCK: BRACKET MTG	66289	PE4	EA		2	*	*	*	*	12	11
0270					0306 - TANKS, LINES, FITTINGS											
0271		0		4730-278-4323	ADAPTER, STRAIGHT, PIPE TO TUBE: CARBURETOR TO FUEL LINE	66289	RF269	EA		1	*	*	*	*	16	13
0272		0		4730-640-5832	ELBOW, PIPE TO TUBE: FUEL LINE TO FUEL PUMP	66289	RF270	EA		1	*	*	*	*	16	11
0273		0		4730-814-4132	ELBOW, PIPE TO TUBE: TANK TO STARTER	30327	269P	EA		1	*	*	*	*	16	7
0274	M	0			LINE, FUEL: FUEL PUMP TO CARBURETOR	66289	RM1122	EA		1					16	12
					MANUFACTURE FROM:											
0274A	X2	0		4730-011-6452	NUT, TUBE COUPLING	79470	1110X4	EA		2	*	*	*	*		
0274B	P	0		4710-277-5525	TUBE, COPPER (8 IN. REQUIRED)			FT			SEE GRP 9501					
0275	P	0		4710-872-1781	LINE, FUEL, PLASTIC: TEFLON, 3/16 IN. ID, 1/4 IN. OD, 1/32 WALL THICK, 53 IN. LG	81336	C13200E5428-1	EA		1	*	*	*	*	13	2
0276	X2	0			MOUNT, FUEL TANK	82254	CFC40018	EA		1	*	*	*	*	13	11
0277		0		4730-277-5575	NIPPLE, PIPE: FUEL STRAINER TO FUEL PUMP	66289	RF794	EA		1	*	*	*	*	16	8
0278		0		5310-584-5005	NUT, PLAIN, HEXAGON: STRAP CLAMPING AND TANK MTG			EA		6	*	*	*	*	13	9
0279		0		5305-068-0502	SCREW, CAP, HEXAGON HEAD: TANK MOUNT TO FRAME			EA		4	*	*	*	*	13	10
0280		0		5305-988-1170	SCREW, MACHINE: FUEL TANK STRAP CLAMPING			EA		2	*	*	*	*	13	7
0281	X2	0		2910-816-4057	STRAP, STEEL: FUEL TANK HOLD DOWN	66289	PG488	EA		2	*	*	*	*	13	6
0282	X2	0			TANK, FUEL: GASOLINE	66289	WE302ES1	EA		1	*	*	*	*	13	5
0283	X2	0		2910-580-0607	CAP, FUEL TANK	66289	RC109S1	EA		1	*	*	*	*	13	3
0284	P	0		5330-582-4084	WASHER, NONMETALLIC: FUEL TANK CAP	66289	QD728	EA		1	*	*	*	*	13	4
0285		0		4730-011-8831	PLUG, PIPE: TANK DRAIN	70470	3150X2	EA		1	*	*	*	*	13	12

LINE NO.	(1) SOURCE, MAINT. AND RECOV. CODE (a) SOURCE	(b) MAINT.	(c) RECOV.	(2) FEDERAL STOCK NUMBER	(3) DESCRIPTION	MANUFACTURER'S CODE	MANUFACTURER'S PART NUMBER	(4) UNIT OF ISSUE	(5) QTY INC IN UNIT PACK	(6) QTY INC IN UNIT	(7) 15 DAY ORG. MAINT. ALW. (a) 1-5	(b) 6-20	(c) 21-50	(d) 51-100	(8) ILLUSTRATION (a) FIG. NO.	(b) ITEM OR SYM. NO.
0286	M	0			TUBE, SYPHON: FUEL TANK	82254	CFA40045	EA		1					13	1
					MANUFACTURE FROM:											
0286A		0		4730-814-4132	ELBOW, PIPE TO TUBE	30327	269P	EA		1	*	*	*	*		
0286B	P	0		4710-277-5525	TUBE, COPPER (12 IN. REQUIRED)			FT			SEE GRP 9501					
0287		0		5310-527-3289	WASHER, LOCK: TANK MOUNT TO FRAME AND STRAP CLAMP SCREW			EA		6	*	*	*	*	13	8
0288					0308 - ENGINE SPEED GOVERNOR AND CONTROLS											
0289	X2	0		2990-374-3163	CONTROL ASSEMBLY, GOVERNOR	66289	TT66	EA		1	*	*	*	*	15	
0290	M	0			CHAIN, SINGLE JACK	82254	CFR40829	EA		1					15	12
					MANUFACTURE FROM:											
0290A	P	0		2990-085-9035	CHAIN, WELDLESS (10 IN. REQUIRED)			FT			SEE GRP 9501					
0291	X2	0		3750-678-6664	COLLAR ASSEMBLY	66289	VE542B	EA		1	*	*	*	*	15	14
0292	X2	0		2805-536-8835	CONTROL, GOVERNOR	66289	VE527W	EA		1	*	*	*	*	15	17
0293	X2	0			LEVER GOVERNOR CONTROL	66289	VB134C	EA		1	*	*	*	*	15	8
0294		0		5310-353-5895	NUT, SLEEVE: ADJUSTING	66289	PD173A	EA		1	*	*	*	*	15	7
0295		0		5315-839-2325	PIN, COTTER: CHAIN CONTROL, LEVER PIN SCREW PIN	66289	X1-1	EA		3	*	*	*	*	15	2
0296		0		5315-012-1224	PIN, COTTER: IN LEVER CHAIN END	66289	X1-7	EA		1	*	*	*	*	15	11
0297		0		5315-366-6291	PIN, STRAIGHT, HEADLESS: GOVERNOR CONTROL LEVER	66289	TC368A	EA		1	*	*	*	*	15	6
0298		0		5315-272-6827	PIN, STRAIGHT, THREADED: GOVERNOR ADJUSTING	66289	P1-115E	EA		1	*	*	*	*	15	3
0299	X2	0			RETAINER, SPRING	66289	PK121	EA		1	*	*	*	*	15	5
0300		0		5305-012-2159	SCREW, MACHINE: FOR COTTER PIN IN LEVER			EA		1	*	*	*	*	15	10
0301		0		5305-407-9163	SETSCREW: COLLAR STOP	66289	XE61	EA		1	*	*	*	*	15	13
0302	X2	0		2995-197-5863	SPRING, HELICAL, COMPRESSION: SCREW ADJUSTING	66289	PM111-1	EA		1	*	*	*	*	15	4
0303		0		5310-366-6294	WASHER, FLAT	66289	PH77	EA		1	*	*	*	*	15	9
0304	P	0	R	2990-732-1179	GOVERNOR ASSEMBLY	66289	T96DS1	EA		1	*	*	*	*	14	
0317		0		4730-585-2359	PLUG, PIPE: GOVERNOR HOUSING	66289	PF18	EA		1	*	*	*	*	14	19
0321		0		5305-071-2237	SCREW, CAP, HEXAGON HEAD: GOVERNOR MTG			EA		2	*	*	*	*	14	7
0322		0		5305-068-0502	SCREW, CAP, HEXAGON HEAD: GOVERNOR MTG			EA		2	*	*	*	*	14	17
0325	X2	0		2990-739-9930	SPRING, GOVERNOR CONTROL	66289	PM75A	EA		1	*	*	*	*	15	1
0326		0		5310-543-2705	WASHER, LOCK: GOVERNOR MTG			EA		4	*	*	*	*	14	6
0335					0311 - ENGINE STARTING AIDS											
0336	X2	0		2910-776-7903	SHAFT ASSEMBLY, PRIMING	66289	TA126	EA		1	*	*	*	*	1	32
0337	X2	0		5330-542-1420	PACKING, PREFORMED: FUEL PUMP PRIMING SHAFT	66289	JK50	EA		1	*	*	*	*	1	31
0338					0312 - THROTTLE OR CHOKE CONTROLS											
0339	X2	0		2990-294-6749	CONTROL ASSEMBLY, PUSH-PULL: CHOKE	66289	VE693	EA		1	*	*	*	*	15	16

LINE NO.	(1) SOURCE, MAINT. AND RECOV. CODE (a) SOURCE	(b) MAINT.	(c) RECOV.	(2) FEDERAL STOCK NUMBER	(3) DESCRIPTION	MANUFACTURER'S CODE	MANUFACTURER'S PART NUMBER	(4) UNIT OF ISSUE	(5) QTY INC IN UNIT PACK	(6) QTY INC IN UNIT	(7) 15 DAY ORG. MAINT. ALW. (a) 1-5	(b) 6-20	(c) 21-50	(d) 51-100	(8) ILLUSTRATION (a) FIG. NO.	(b) ITEM OR SYM. NO.
0340		0		5310-010-7823	NUT, STAMPED: BUSHING RETAINER			EA		1	*	*	*	*	15	15
0341		0		5315-828-8190	PIN, COTTER: GOVERNOR CONTROL ROD TO CARBURETOR			EA		1	*	*	*	*	16	27
0342	X2	0			ROD, THROTTLE: CARBURETOR TO GOVERNOR	66298	VE5558	EA		1	*	*	*	*	16	25
0343					GROUP 04 - EXHAUST SYSTEM											
0343A					0401 - MUFFLER AND PIPES											
0344	X2	0			BRACKET, MUFFLER	82254	CFB40009	EA		1	*	*	*	*		
0345		0		5306-012-6078	BOLT, MACHINE: LOWER SUPPORT TO MUFFLER BRACKET			EA		2	*	*	*	*	17	8
0346	X2	0			CAP, SPRING: LOWER SUPPORT CLAMP TO MUFFLER BRACKET	82254	CFA32033	EA		4	*	*	*	*	17	9
0347	X1				CLAMP, SUPPORT: LOWER	82254	CFA40030	EA		1					17	17
0348	X1				CLAMP, SUPPORT: UPPER	82254	CFA40025	EA		1					17	1
0349		0		5310-584-5005	NUT, PLAIN, HEXAGON: UPPER CLAMP TO LOWER CLAMP			EA		2	*	*	*	*	17	14
0350		0		5310-045-1005	NUT, SELF-LOCKING, HEXAGON: LOWER SUPPORT TO MUFFLER BRACKET			EA		2	*	*	*	*	17	16
0351		0		5305-068-0500	SCREW, CAP, HEXAGON HEAD: UPPER CLAMP TO LOWER CLAMP			EA		2	*	*	*	*	17	2
0352	X2	0			SPRING, HELICAL, COMPRESSION: LOWER SUPPORT TO MUFFLER BRACKET	82254	CFA40008	EA		4	*	*	*	*	17	10
0353	X1				SUPPORT, MUFFLER BRACKET	82254	CFA40027	EA		1					17	11
0354		0		5310-527-3289	WASHER, LOCK: UPPER CLAMP TO LOWER CLAMP			EA		2	*	*	*	*	17	15
0355		0		4730-221-3928	ELBOW, PIPE: EXHAUST PIPE TO MUFFLER			EA		1	*	*	*	*	17	4
0356	P	0		2990-141-9229	MUFFLER, EXHAUST	66289	WD41C	EA		1	*	*	*	*	17	3
0357		0		4730-278-3358	PLUG, PIPE: MUFFLER DRAIN			EA		1	*	*	*	*	17	18
0358	M	0			PIPE, EXHAUST	81336	A13200E5434	EA		1					17	5
0358A	P	0		4710-162-0991	MANUFACTURE FROM: PIPE, STEEL (1¼ IN. REQUIRED)			FT			SEE GRP 9501					
0359		0		5305-068-0502	SCREW, CAP, HEXAGON HEAD: MUFFLER SUPPORT TO CANOPY			EA		2	*	*	*	*	17	13
0360		0		5310-595-5599	WASHER, FLAT: SUPPORT TO CANOPY MTG			EA		2	*	*	*	*	17	12
0361					GROUP 05 - COOLING SYSTEM											
0361A					0502 - DEFLECTORS, SHROUDS											
0363	X2	0			CLIP, CABLE: SHIELD BOX TO AMMETER LEAD	82254	CFA40044	EA		1	*	*	*	*	4	9
0364	X2	0			COVER, AIR SHROUD	66289	SE137D7	EA		1	*	*	*	*	18	3
0365	X2	0		2990-776-8106	DEFLECTOR, HEAT	66289	SE138	EA		1	*	*	*	*	18	6
0366	X2	0			SCREEN, FLYWHEEL	66289	SE32	EA		1	*	*	*	*	4	19
0367		0		5305-988-1723	SCREW, MACHINE: AIR SHROUD TO BLOCK	66289	XA34	EA		2	*	*	*	*	18	7

LINE NO.	(1) SOURCE, MAINT. AND RECOV. CODE (a) SOURCE	(b) MAINT.	(c) RECOV.	(2) FEDERAL STOCK NUMBER	(3) DESCRIPTION	MANUFACTURER'S CODE	MANUFACTURER'S PART NUMBER	(4) UNIT OF ISSUE	(5) QTY INC IN UNIT PACK	(6) QTY INC IN UNIT	(7) 15 DAY ORG. MAINT. ALW. (a) 1-5	(b) 6-20	(c) 21-50	(d) 51-100	(8) ILLUSTRATION (a) FIG. NO.	(b) ITEM OR SYM. NO.
0368		0		5305-988-1726	SCREW, MACHINE: FLYWHEEL SCREEN MTG			EA		4	*	*	*	*	4	11
0369		0		5305-988-1721	SCREW, MACHINE: SHROUD MTG	66289	XA33	EA		11	*	*	*	*	18	2
0370		0		5305-988-1725	SCREW, MACHINE: SHROUD TO BLOCK	66289	XA36	EA		1	*	*	*	*	18	5
0371	X2	0			SHROUD, CYLINDER	66289	SE136D	EA		1	*	*	*	*	18	1
0373		0		5310-543-2705	WASHER, LOCK: FLYWHEEL SCREEN MTG			EA		4	*	*	*	*	4	10
0374		0		5310-261-7341	WASHER, LOCK: SHROUD MTG	66289	PE3	EA		13	*	*	*	*	18	4
0376					GROUP 06 - ELECTRICAL SYSTEM											
0376A					0601 - GENERATOR											
0377	X2	0			ARM, STABILIZER: GENERATOR ADJUSTING	82254	CFA40034	EA		1	*	*	*	*	19	26
0378	P	0		3030-528-4261	BELT, V: GENERATOR DRIVE	71956	4L250	EA		1	*	*	2	2	19	20
0379		0		5306-680-6004	BOLT, MACHINE: ADJUSTING ARM TO GENERATOR AND FRAME	96906	MS35291-32	EA		2	*	*	*	*	19	27
0380		0		5305-206-1071	BOLT, MACHINE: GENERATOR MTG	96906	MS35291-36	EA		2	*	*	*	*	19	1
0381	P	0	R	2920-861-1320	GENERATOR, BATTERY CHARGING (INCLUDES COMPONENTS OF REPAIR, STOCK No. 2920-843-6741)	19728	GJP7404AT	EA		1	*	*	*	*	19	
0432		0		5310-045-1005	NUT, SELF-LOCKING, HEXAGON: GENERATOR MOUNTING	82254	CFR40744	EA		2	*	*	*	*	19	8
0439	X2	0			WASHER, CLAMP: GENERATOR TENSION ADJUSTING	82254	CFA40035	EA		1	*	*	*	*	19	28
0440	X2	0			WASHER, FLAT: GENERATOR MTG	82254	CFR40803	EA		1	*	*	*	*	19	7
0441		0		5310-639-8061	WASHER, LOCK: GENERATOR MTG			EA		4	*	*	*	*	19	2
0442					0602 - GENERATOR REGULATOR											
0443		0		5310-800-5282	NUT, PLAIN, HEXAGON: REGULATOR	96906	MS35691-405	EA		2	*	*	*	*	26	17
0444	P	0		2920-785-6393	REGULATOR, VOLTAGE	19728	VB04201ET	EA		1	*	*	2	2	26	4
0445		0		5305-044-3507	SCREW, MACHINE: REGULATOR			EA		2	*	*	*	*	26	14
0446		0		5305-988-1725	SCREW, MACHINE: REGULATOR AND BOX MTG			EA		2	*	*	*	*	26	19
0447		0		5310-527-3289	WASHER, LOCK: REGULATOR MTG	96906	MS35333-23	EA		4	*	*	*	*	26	18
0448		0		5310-655-6314	WASHER, LOCK: REGULATOR MTG	66289	PE34A	EA		4	*	*	*	*	*26	16
0449					0603 - STARTING MOTOR											
0450	X2	0			BRACKET, STARTER SUPPORT	66289	PG516A	EA		1	*	*	*	*	21	3
0451	X2	0			CABLE, ELECTRICAL: STARTER TO STARTER SWITCH	66289	YL292	EA		1	*	*	*	*	21	9
0452	P	0		1015-298-8702	GASKET: BRACKET MTG, COPPER			EA		2	*	*	*	2	21	2
0453	P	0	R	2920-555-6315	MOTOR ASSEMBLY, STARTING 12 VOLT (INCLUDES COMPONENTS OF PARTS KIT, STOCK No. 2920-710-6107)	19728	MBG402AT	EA		1	*	*	*	*	21	
[illegible]	[illegible]			2920-505-5108	ARMATURE, STARTER	19728	MZ2366T	EA		1					21	14

LINE NO.	(1) SOURCE, MAINT. AND RECOV. CODE (a) SOURCE	(b) MAINT.	(c) RECOV.	(2) FEDERAL STOCK NUMBER	(3) DESCRIPTION	MANUFACTURER'S CODE	MANUFACTURER'S PART NUMBER	(4) UNIT OF ISSUE	(5) QTY INC IN UNIT PACK	(6) QTY INC IN UNIT	(7) 15 DAY ORG. MAINT. ALW. (a) 1-5	(b) 6-20	(c) 21-50	(d) 51-100	(8) ILLUSTRATION (a) FIG. NO.	(b) ITEM OR SYM. NO.
0595					0615 - RADIO INTERFERENCE SUPPRESSION											
0596	P	O		5910-127-7252	CAPACITOR: ARMATURE TERMINAL ON REGULATOR TO SHIELD BOX	81347	ESC8071CA445	EA		1	*	*	*	2	26	15
0597	M	O			LEAD, ELECTRICAL: AMMETER TO FEED THRU CAPACITOR	82254	CFA40041	EA		1					26	10
					MANUFACTURE FROM:											
0597A	P	O		2920-986-9691	TERMINAL, LUG			EA		2	SEE GRP 9501					
0597B	P	O		6145-164-7033	WIRE, ELECTRICAL (14 IN. REQUIRED)			FT			SEE GRP. 9501					
0598	X2	O			LEAD ASSEMBLY, ELECTRICAL, SHIELDED: SHIELD BOX TO GENERATOR (95875) CLS3H0080-0132-3			EA		1	*	*	*	*	26	11
0599	X2	O			LEAD ASSEMBLY, ELECTRICAL, SHIELDED: SHIELD BOX TO GENERATOR (95875) CLS3H0080-0132-5			EA		1	*	*	*	*	26	12
0600	M	O			LEAD, ELECTRICAL: CAPACITOR TO ARMATURE TERMINAL ON VOLTAGE REGULATOR	82254	CFA40042	EA		1					26	22
					MANUFACTURE FROM:											
0600A	P	O		5940-321-9299	TERMINAL, LUG			EA		2	SEE GRP 9501					
0600B	P	O		6145-164-7033	WIRE, ELECTRICAL (6 IN. REQUIRED)			FT			SEE GRP 9501					
0601		O		5310-800-5282	NUT, PLAIN, HEXAGON: CAPACITOR MTG	96906	MS35691-405	EA		1	*	*	*	*	26	17
0602		O		5305-044-3507	SCREW, MACHINE: CAPACITOR MTG			EA		1	*	*	*	*	26	14
0603		O		5305-988-1725	SCREW, MACHINE: REGULATOR BOX MTG			EA		2	*	*	*	*	26	19
0604	X2	O		2920-627-0946	SHIELDING KIT: VOLTAGE REGULATOR	95875	C225	EA		1	*	*	*	*	26	
0605	X2	O		2920-654-3703	ADAPTER INSULATOR: BUSHING, LEAD ENTRANCE TO BOX	95875	3629	EA		2	*	*	*	*	26	13
0606	X1				BASE ASSEMBLY	95875	228	EA		1					26	6
0607	P	O		5910-677-5348	CAPACITOR ASSEMBLY: FEED THRU, FIXED, PAPER DIELECTRIC, 2 UF, 50 AMP, 100 VOLT, DC	95875	297	EA		1	*	*	*	*	26	7
0608	X1			2920-962-4598	COVER, SHIELDING BOX	95875	227	EA		1					26	1
0609	M	O		2920-986-9691	LEAD ASSEMBLY: REGULATOR TO FEED THRU CAPACITOR	95875	ELV3-0050-3	EA		1					26	5
					MANUFACTURE FROM:											
0609A	P	O		2920-986-9691	TERMINAL LUG			EA		2	SEE GRP 9501					
0609B	P	O		6145-295-0804	WIRE, ELECTRICAL (5 1/2 IN. REQUIRED)			FT			SEE GRP 9501					
0610	X2	O			NUT, LOCK: ADAPTER MTG	95875	3010A	EA		2	*	*	*	*	26	21
0611		O		5310-333-6117	NUT, PLAIN, HEXAGON: FEED THRU CAPACITOR MTG	95875	137	EA		4	*	*	*	*	26	20
0612		O		5305-012-0687	SCREW, MACHINE: COVER TO BOX MTG	95875	454	EA		4	*	*	*	*	26	2
0613		O		5305-013-1899	SCREW, MACHINE: FEED THRU CAPACITOR MOUNTING			EA		4	*	*	*	*	26	9
0614		O		5310-655-6314	WASHER, LOCK: CAPACITOR MTG	66289	PE34A	EA		2	*	*	*	*	26	16
0615		O		5310-527-3288	WASHER, LOCK: COVER TO BOX MTG	95875	616	EA		4	*	*	*	*	26	3
0616		O		5310-013-8526	WASHER, LOCK: FEED THRU CAPACITOR MTG	95875	617	EA		8	*	*	*	*	26	8
0617		O		5310-527-3289	WASHER, LOCK: REGULATOR BOX MTG	96906	MS35333-23	EA		2	*	*	*	*	26	18

LINE NO.	(1) SOURCE, MAINT. AND RECOV. CODE (a) SOURCE	(b) MAINT.	(c) RECOV.	(2) FEDERAL STOCK NUMBER	(3) DESCRIPTION	MANUFACTURER'S CODE	MANUFACTURER'S PART NUMBER	(4) UNIT OF ISSUE	(5) QTY INC IN UNIT PACK	(6) QTY INC IN UNIT	(7) 15 DAY ORG. MAINT. ALW. (a) 1-5	(b) 6-20	(c) 21-50	(d) 51-100	(8) ILLUSTRATION (a) FIG. NO.	(b) ITEM OR SYM. NO.
0629					GROUP 18 - BODY, CAB, HOOD AND HULL											
0629A					1801 - BODY, CAB, HOOD											
0630	X2	0			CANOPY ASSEMBLY	81336	D13200E5402	EA		1	*	*	*	*	28	
0631	X2	0			DECK PLATE	81336	B13200E5417	EA		1	*	*	*	*	28	17
0632	X2	0			FLANGE, MUFFLER	81336	A13200E5427	EA		1	*	*	*	*	28	22
0633		0		5310-584-5005	NUT, PLAIN, HEXAGON: FLANGE MTG			EA		4	*	*	*	*	28	26
0634		0		5305-068-0502	SCREW, MACHINE: FLANGE MTG			EA		4	*	*	*	*	28	21
0635		0		5310-527-3289	WASHER, LOCK: FLANGE MTG			EA		4	*	*	*	*	28	25
0636	X2	0			PANEL, FRONT	81336	B13200E5413	EA		1	*	*	*	*	28	14
0637	X2	0			GROMMET, FRONT PANEL	81336	B13200E5413-5	EA		8	*	*	*	*	28	12
0638	X2	0			RETAINER, FRONT PANEL	81336	B13200E5413-6	EA		8	*	*	*	*	28	11
0639	X2	0			STUD, FRONT PANEL	81336	B13200E5413-4	EA		8	*	*	*	*	28	13
0640	X2	0			PANEL, REAR	81336	B13200E5415	EA		1	*	*	*	*	28	6
0641	X2	0			GROMMET, REAR PANEL	81336	B13200E5415-5	EA		8	*	*	*	*	28	4
0642	X2	0			RETAINER, REAR PANEL	81336	B13200E5415-6	EA		8	*	*	*	*	28	3
0643	X2	0			STUD, REAR PANEL	81336	B13200E5415-4	EA		8	*	*	*	*	28	5
0644	X2	0			RECEPTACLE: PANEL LATCHING	82254	CFR40421	EA		14	SEE	GRP 9901			28	15
0645		0		5320-118-1759	RIVET, SOLID: RECEPTACLE MTG	82254	CFR40422	EA		28	*	*	*	*	28	16
0646	X2	0			STRAP, HOLD DOWN: ELBOW TO CANOPY MTG	81336	A13200E5423	EA		5	SEE	GRP 1808				
0647	X2	0			STRAP, HOLD DOWN: ELBOW TO CANOPY MTG	81336	A13200E5424	EA		1	SEE	GRP 1808				
0648	X2	0			STRAP, HOLD DOWN: MANIFOLD SUPPORT	81336	A13200E5425-1	EA		1	SEE	GRP 1808				
0649		0		5325-281-3993	STUD, SNAP, FASTENER: CURTAIN	82254	CFR40420	EA		18	*	*	*	*	28	10
0650		0		5305-639-8115	SCREW, CAP, HEXAGON HEAD: CANOPY TO FRAME			EA		8	*	*	*	*	28	9
0651		0		5305-012-0697	SCREW, MACHINE: CANOPY TO FRAME			EA		4	*	*	*	*		
0652					1808 - STRAPS											
0653	X2	0			STRAP, HOLD DOWN: ELBOW TO CANOPY MTG	81336	A13200E5422	EA		2	*	*	*	*	28	1
0654	X2	0			STRAP, HOLD DOWN: ELBOW TO CANOPY MTG	81336	A13200E5424	EA		1	*	*	*	*	28	19
0655	X2	0			STRAP, HOLD. DOWN: MANIFOLD TO CANOPY	81336	A13200E5425-1	EA		1	*	*	*	*	28	2
0656					GROUP 22 - BODY, CHASSIS OR HULL, AND ACCESSORY ITEMS											
0656A					2201 - CANVAS ITEMS											
0657	X2	0			CURTAIN ASSEMBLY	81336	B13200E5421	EA		2	*	*	*	*	28	8
0658	M	0		9320-771-1512	SHIM: CURTAIN STRIP TO DECK PLATE MANUFACTURE FROM:			EA		2					28	23
0658A	P	0		5330-505-6611	RUBBER SHEET, SOLID (16 IN. REQUIRED FOR EACH SHIM)			FT			SEE	GRP 9901				

LINE NO.	(1) SOURCE, MAINT. AND RECOV. CODE (a) SOURCE	(b) MAINT.	(c) RECOV.	(2) FEDERAL STOCK NUMBER	(3) DESCRIPTION	MANUFACTURER'S CODE	MANUFACTURER'S PART NUMBER	(4) UNIT OF ISSUE	(5) QTY INC IN UNIT PACK	(6) QTY INC IN UNIT	(7) 15 DAY ORG. MAINT. ALW. (a) 1-5	(b) 6-20	(c) 21-50	(d) 51-100	(8) ILLUSTRATION (a) FIG. NO.	(b) ITEM OR SYM. NO.
0659	M	0		9320-771-1513	SHIM: CURTAIN STRIP TO DECK PLATE	81336	B13200E45420-2	EA		4					28	24
					MANUFACTURE FROM:											
0659A	P	0		5330-505-6611	RUBBER SHEET, SOLID (9 IN. REQUIRED FOR EACH SHIM)			FT			SEE	GRP	9501			
0660	M	0		3740-971-1418	STRIP, CURTAIN	81336	B13200E5419	EA		2					28	7
					MANUFACTURE FROM:											
0660A	P	0		9515-554-0893	STEEL, STRIP, CARBON, HOT ROLLED (3 FT 1 IN. REQUIRED FOR EACH STRIP)			FT			SEE	GRP	9501			
0661		0		5310-584-5005	NUT, PLAIN, HEXAGON: CURTAIN MTG			EA		26	*	*	*	*	28	26
0662	X2	0			RECEPTACLE: CURTAIN HOLD DOWN STRAP	70655	7420	EA		13	*	*	*	*	28	18
0663		0		5320-118-1759	RIVET, SOLID: RECEPTACLE MTG			EA		26	*	*	*	*	28	16
0664		0		5305-068-0510	SCREW, CAP, HEXAGON HEAD: CURTAIN MTG			EA		26	*	*	*	*	28	5
0665		0		5310-527-3289	WASHER, LOCK: CURTAIN MTG	82254	CFR40288-5	EA		26	*	*	*	*	28	25
0666					2210 - DATA PLATES											
0667	X2	0			LABEL SET, IDENTIFICATION	81336	A13200E5402	EA		1	*	*	*	*		
0668	X2	0			PLATE, IDENTIFICATION: AIR PRESSURE VALVE	81336	D13200E5399-38	EA		1	*	*	*	*		
0669	X2	0			PLATE, IDENTIFICATION: BY-PASS	81336	D13200E5399-35	EA		2	*	*	*	*		
0672	X2	0			PLATE, IDENTIFICATION: FLOW CONTROL	81336	D13200E5399-39	EA		1	*	*	*	*		
0673	X2	0			PLATE, IDENTIFICATION: INSECTICIDE PRESSURE	81336	D13200E5399-37	EA		1	*	*	*	*		
0674	X2	0			PLATE, IDENTIFICATION: INTAKE	81336	D13200E5399-36	EA		1	*	*	*	*		
0675	X2	0			PLATE, IDENTIFICATION: NOZZLE	81336	D13200E5399-34	EA		1	*	*	*	*		
0678	X2	0		2920-447-9295	PLATE, INSTRUCTION: ON AND OFF	66289	SD108	EA		1	*	*	*	*		
0679	X2	0			PLATE, NAME: BLOWER	01510	6459	EA		1	*	*	*	*		
0681		0		5320-117-7106	RIVET, SOLID: IDENTIFICATION PLATES MTG	81336	D13200E5399-40	EA		14	*	*	*	*		
0682	X2	0			SCREW, DRIVE: BLOWER NAMEPLATE MTG	01510	1120	EA		6	*	*	*	*		
0685		0			SCREW, TAPPING, THREAD CUTTING: PLATE MOUNTING	66289	XA67	EA		8	*	*	*	*		
0687					GROUP 47 - GAGES (NON-ELECTRICAL), WEIGHING AND MEASURING DEVICES											
0687A					4702 - GAGES, LINES AND FITTINGS											
0688	M	0			BRACKET, HOSE CLIP			EA		1					21	22
					MANUFACTURE FROM:											
0688A	P	0		9515-529-0429	STEEL STRIP, CARBON, HOT ROLLED (3/4 IN. REQUIRED)			FT			SEE	GRP	9501			
0689	X2	0		6690-704-1862	FLOWMETER	22375	10A2235	EA		1	*	*	*	*		
0690	X1				BODY, METER	22375	322A035	EA		1					33	39
					[illegible]	22375	26A0024	EA		1					33	71

LINE NO.	(1) SOURCE, MAINT. AND RECOV. CODE (a) SOURCE	(b) MAINT.	(c) RECOV.	(2) FEDERAL STOCK NUMBER	(3) DESCRIPTION	MANUFACTURER'S CODE	MANUFACTURER'S PART NUMBER	(4) UNIT OF ISSUE	(5) QTY INC IN UNIT PACK	(6) QTY INC IN UNIT	(7) 15 DAY ORG. MAINT. ALW. (a) 1-5	(b) 6-20	(c) 21-50	(d) 51-100	(8) ILLUSTRATION (a) FIG. NO.	(b) ITEM OR SYM. NO.
0692	X1				FLOAT, OUT	22375	CFR40469	EA		1					33	34
0693		0		4730-044-4704	PLUG, PIPE: FLOWMETER BODY			EA		2	*	*	*	*	33	67
0694	X1				RING, O: INLET FITTING	22375	101A710	EA		1					33	70
0695	X1				RING, O: INLET FITTING	22375	101A923	EA		1					33	69
0696	X1			5330-806-7624	RING, O: INLET FITTING	22375	101A926	EA		1					33	68
0697	X1				RING, O: OUT ADAPTER	22375	101A714	EA		2					33	36
0698	X1				RING, OUT ADAPTING: BRASS	22375	376C032	EA		1					33	37
0699	X1				STOP, FLAT	22375	304A193	EA		1					33	35
0700	X1				TUBE, METER	22375	CFR40468	EA		1					33	38
0701	X2	0		6685-855-7226	GAGE, PRESSURE: SCALE MARK 0 TO 100	81336	D13200E5399-7	EA		1	*	*	*	*	33	65
0702	X2	0			MANOMETER	85274	1215-12	EA		1	*	*	*	*	33	41
0703	X1				CLIP, SCALE	85274	1216-13WM4	EA		1						
0704	X1				CLIP, SCALE	85274	1215-12WM6	EA		1						
0705	X1				PLUG, VALVE, RING	85274	1215-12WM1	EA		2						
0706	X1				SCALE	85274	1215-12WM5	EA		1						
0707	X1				TRAP, SAFETY	85274	1215-12WM2	EA		2						
0708	X1				WELL AND TUBE	85274	1215-12WM3	EA		1						
0709		0		5310-011-3102	NUT, PLAIN, HEXAGON: MANOMETER MTG			EA		1	*	*	*	*	33	10
0710		0		5310-012-0361	NUT, PLAIN, HEXAGON: MANOMETER MTG	96906	MS35650-102	EA		2	*	*	*	*	33	24
0711		0		5305-013-3648	SCREW, MACHINE: MANOMETER MTG	96906	MS35242-77	EA		2	*	*	*	*	33	40
0712		0		5305-043-6667	SCREW, MACHINE: MANOMETER MTG			EA		1	*	*	*	*	33	42
0713	M	0			TUBE: AIR PRESSURE LINE FROM PRESSURE VALVE TO MANOMETER	81336	D13200E5399-24	EA		1					33	25
					MANUFACTURE FROM:											
0713A	P	0		4710-809-8149	PLASTIC TUBING (8 IN. REQUIRED)			FT			SEE	GRP	9501			
0714	M	0		3740-971-1419	TUBE: MANOMETER VENT	81336	D13200E5399-23	EA		1					33	27
					MANUFACTURE FROM:											
0714A	P	0		4710-809-8149	PLASTIC TUBING (2 1/2 IN. REQUIRED)			FT			SEE	GRP	9501			
0715	X2	0			VALVE, NEEDLE: AIR PRESSURE, BOTH ENDS MALE, 1/8-27 THD SIZE	81336	D13200E5399-2	EA		1	*	*	*	*	33	62
0716		0		5310-527-3288	WASHER, LOCK: MANOMETER MTG	96906	MS35333-22	EA		2	*	*	*	*	33	26
0717		0		5310-595-7235	WASHER, LOCK: MANOMETER MTG	81336	MS35333-20	EA		1	*	*	*	*	33	9
0718					GROUP 55 - PUMPS											
0718A					5500 - PUMP ASSEMBLY											
0722		0		4730-084-0469	FITTING, LUBRICATION: CAP AND STAND	09058	92-5660-1348	EA		3	*	*	*	*	29	13
0726		0		5310-012-0377	NUT, PLAIN, HEXAGON: PUMP AND SHIM MTG	96906	MS35690-602	EA		4	*	*	*	*	29	23
0728	X2	0			PUMP ASSEMBLY, WATER	09058	820-6-305	EA		1	*	*	*	*	29	
0730		0		5305-012-2181	SCREW, CAP, HEXAGON HEAD: PUMP AND SHIM MOUNTING	96906	MS35291-66	EA		4	*	*	*	*	29	20
0731	X2	0			SHIM: PUMP MTG	81336	A13200E5431	EA		1	*	*	*	*	29	21
0733		0		5310-595-7237	WASHER, LOCK: PUMP AND SHIM MTG	96906	MS35333-42	EA		4	*	*	*	*	29	22

LINE NO.	(1) SOURCE, MAINT. AND RECOV. CODE (a) SOURCE	(b) MAINT.	(c) RECOV.	(2) FEDERAL STOCK NUMBER	(3) DESCRIPTION	MANUFACTURER'S CODE	MANUFACTURER'S PART NUMBER	(4) UNIT OF ISSUE	(5) QTY INC IN UNIT PACK	(6) QTY INC IN UNIT	(7) 15 DAY ORG. MAINT. ALW. (a) 1-5	(b) 6-20	(c) 21-50	(d) 51-100	(8) ILLUSTRATION (a) FIG. NO.	(b) ITEM OR SYM. NO.
0747					5505 - SUCTION OR DISCHARGE SYSTEM											
0748	P	0		5330-793-1057	GASKET: RELIEF VALVE NUT	09058	466-3989	EA		1	SEE	GRP 9901			29	26
0749	X2	0		4320-167-8216	PLUNGER, RELIEF VALVE	09058	213-1-786	EA		1	*	*	*	*	29	28
0750	X2	0			SCREW, ADJUSTING: RELIEF VALVE, W/NUT	09058	213-1-783	EA		1	*	*	*	*	29	24
0751	X2	0			SPRING, HELICAL, COMPRESSION: RELIEF PLUNGER	09058	92-1000-1240-18	EA		1	*	*	*	*	29	27
0752					5507 - PUMP DRIVE											
0753	P	0		3030-542-3702	BELT, V: PUMP DRIVE	71176	AP26	EA		1	*	*	2	2	29	39
0754		0		5306-207-9782	BOLT, MACHINE: BUSHING TO SHEAVE	66289	XD17	EA		3	*	*	*	*	29	38
0757	X2	0			SHEAVE, PUMP DRIVE	71176	1TB52	EA		1	*	*	*	*	29	3
0758					GROUP 57 - SPRAY EQUIPMENT											
0758A					5703 - AIR BLOWER ASSEMBLY											
0759	X2	0			AIR BLOWER ASSEMBLY	01510	10-4009-409	EA		1	*	*	*	*		
0762	P	0		3030-246-0152	BELT, V: BLOWER DRIVE, MATCHED SET OF 3	71176	BP60-3	EA		1	*	*	2	2	31	23
0764		0		5306-207-9782	BOLT, MACHINE: BUSHING TO SHEAVE	66289	XD17	EA		3	*	*	*	*	31	22
0767	X2	0			BREATHER ASSEMBLY, VENTILATION	01510	90247	EA		1	*	*	*	*		
0768	X1				BASE, BREATHER	01510	569021	EA		1					31	37
0769	X2	0			ELEMENT, BREATHER	01510	R16-16	EA		1	*	*	*	*	31	38
0770		0		5305-013-2768	SCREW, MACHINE: SHIELD TO BASE MTG			EA		1	*	*	*	*	31	41
0771	X1				SHIELD, BREATHER	01510	568702B	EA		1					31	39
0772		0		5310-013-8530	WASHER, LOCK: SHIELD TO BASE MTG			EA		1	*	*	*	*	31	40
0773	X2	0			BUSHING, PULLEY SHEAVE	71176	P1-1-1-8	EA		1	*	*	*	*	31	21
0777	X2	0			FITTING, LUBRICATING: END PLATE	01510	90265	EA		2	*	*	*	*	30	13
0778	X2	0			FITTING, RELIEF	01510	90102	EA		2	*	*	*	*	30	3
0781	P	0		3740-542-3717	GASKET: INTAKE AND EXHAUST FLANGE	01510	7932	EA		2	*	2	2	3	30	28
0794	X2	0			PLATE, NAME: BLOWER	01510	6459	EA		1	SEE	GRP 2210				
0795	X2	0			PLUG, MAGNETIC: OIL DRAIN, STEEL, 3/8-18 THD SIZE	01510	90209	EA		1	*	*	*	*	31	27
0796		0		4730-044-4688	PLUG, PIPE: BEARING CAP			EA		2	*	*	*	*	30	10
0797		0		4730-044-4698	PLUG, PIPE: GEAR END PLATE			EA		6	*	*	*	*	31	5
0798		0		4730-044-5686	PLUG, PIPE: PLATE			EA		2	*	*	*	*	31	4
0804	X2	0			SCREW, DRIVE: BLOWER NAMEPLATE MTG	01510	1120	EA		6	SEE	GRP 2210				
0811	X2	0		3020-877-1194	PULLEY, THREE GROOVE: BLOWER DRIVE	71176	3TB60	EA		1	*	*	*	*	31	24
0819	X2	0			BRACKET, BELT TENSION: BLOWER ALIGNMENT AND BELT ADJUSTING	81336	C13200E5432	EA		1	*	*	*	*	30	17
0820		0		5310-584-5005	NUT, PLAIN, HEXAGON: BELT TENSION BRACKET	96906	MS135690-405	EA		2	*	*	*	*	30	16
0821		0		5305-637-4034	SCREW, CAP, HEXAGON HEAD: BELT TENSION BRACKET	96906	MS35291-13	EA		2	*	*	*	*	30	15
0831	X2	0			FLANGE: MANIFOLD MTG	81336	B13200E5355	EA		1	*	*	*	*	30	26

LINE NO.	(1) SOURCE, MAINT. AND RECOV. CODE (a) SOURCE	(b) MAINT.	(c) RECOV.	(2) FEDERAL STOCK NUMBER	(3) DESCRIPTION	MANUFACTURER'S CODE	MANUFACTURER'S PART NUMBER	(4) UNIT OF ISSUE	(5) QTY INC IN UNIT PACK	(6) QTY INC IN UNIT	(7) 15 DAY ORG. MAINT. ALW. (a) 1-5	(b) 6-20	(c) 21-50	(d) 51-100	(8) ILLUSTRATION (a) FIG. NO.	(b) ITEM OR SYM. NO.
0832	X2	0			GUARD ASSEMBLY, BELT	81336	D13200E0109	EA		1	*	*	*	*	27	3
0833		0		5305-637-4028	SCREW, CAP, HEXAGON HEAD: BELT GUARD MTG	96906	MS35291-3	EA		6	*	*	*	*	27	1
0834		0		5305-639-8115	SCREW, CAP, HEXAGON HEAD: BELT GUARD MOUNTING			EA		1	*	*	*	*	27	4
0835		0		5310-011-5547	WASHER, LOCK: BELT GUARD MTG			EA		7	*	*	*	*	27	2
0836	X2	0			MANIFOLD ASSEMBLY, INTAKE	81336	C13200E5363	EA		1	*	*	*	*	30	31
0837		0		5310-012-0377	NUT, PLAIN, HEXAGON: BLOWER TO FRAME MOUNTING			EA		2	*	*	*	*	31	32
0838		0		5310-012-0377	NUT, PLAIN, HEXAGON: BLOWER TO FRAME MOUNTING			EA		2	*	*	*	*	30	33
0839		0		5305-639-8118	SCREW, CAP, HEXAGON HEAD: BLOWER TO FRAME MTG			EA		2	*	*	*	*	31	34
0840		0		5305-639-8118	SCREW, CAP, HEXAGON HEAD: BLOWER TO FRAME MTG			EA		2	*	*	*	*	30	14
0841		0		5305-638-9082	SCREW, CAP, HEXAGON HEAD: FLANGE MANIFOLD MTG			EA		12	*	*	*	*	30	24
0842		0		5305-550-1310	SCREW, CAP, HEXAGON HEAD: INTAKE MANIFOLD MTG	96906	MS35291-60	EA		12	*	*	*	*	30	29
0843		0		5310-013-8542	WASHER, LOCK: BLOWER TO FRAME AND FLANGE TO HOUSING MTG	66289	PE80A	EA		16	*	*	*	*	30	25
0844		0		5310-013-8542	WASHER, LOCK: BLOWER TO FRAME MTG	66289	PE80A	EA		2	*	*	*	*	31	33
0845		0		5310-595-7237	WASHER, LOCK: INTAKE MANIFOLD MTG	96906	MS35333-42	EA		12	*	*	*	*	30	30
0855					5707 - INSTRUMENT PANEL											
0856	X2	0			BRACKET, PANEL	81336	A13200E5412	EA		1	*	*	*	*	33	30
0857		0		5310-584-5005	NUT, PLAIN, HEXAGON: PANEL MTG AND BRACKET TO CANOPY	96906	MS35690-405	EA		11	*	*	*	*	33	5
0858	X2	0			PANEL ASSEMBLY, INSTRUMENT	81336	D200E5399	EA		1	*	*	*	*	33	
0859	X2	0			LABEL SET, IDENTIFICATION	81336	A13200E5402	EA		1	SEE GRP 2210					
0860	X2	0			MOUNT, VIBRATION: PANEL MTG	80124	60F408	EA		5	*	*	*	*	33	8
0861	X1				PANEL, INSTRUMENT	82254	CFC40010	EA		1					33	7
0862		0		5320-117-7106	RIVET, SOLID: IDENTIFICATION PLATES MOUNTING			EA		14	SEE GRP 2210					
0863		0		5305-627-4028	SCREW, CAP, HEXAGON HEAD: BRACKET TO CANOPY	96906	MS35291-3	EA		1	*	*	*	*	33	31
0864		0		5310-527-3289	WASHER, LOCK: PANEL MTG AND BRACKET TO CANOPY			EA		11	*	*	*	*	33	6
0865					5708 - TANKS, VALVES, LINES, HOSES, FITTINGS, AND LIQUID STRAINER											
0866		0		4730-202-6694	BUSHING, PIPE: HOSE STRAINER, FLOW METER			EA		2	*	*	*	*	33	32
0867		0		4730-194-0219	BUSHING, PIPE: LINE STRAINER			EA		2	*	*	*	*	33	15

LINE NO.	(1) SOURCE, MAINT. AND RECOV. CODE (a) SOURCE	(b) MAINT.	(c) RECOV.	(2) FEDERAL STOCK NUMBER	(3) DESCRIPTION	MANUFACTURER'S CODE	MANUFACTURER'S PART NUMBER	(4) UNIT OF ISSUE	(5) QTY INC IN UNIT PACK	(6) QTY INC IN UNIT	(7) 15 DAY ORG. MAINT. ALW. (a) 1-5	(b) 6-20	(c) 21-50	(d) 51-100	(8) ILLUSTRATION (a) FIG. NO.	(b) ITEM OR SYM. NO.
0868		0		4730-277-7899	BUSHING, PIPE: OUTLET LINE FROM LINE STRAINER			EA		1	*	*	*	*	33	17
0869		0		4730-277-7899	BUSHING, PIPE: PUMP TO UNION	81336	D13200E5499-16	EA		2	*	*	*	*	29	31
0870		0		4730-277-7051	BUSHING, PIPE: SPRAY LINE			EA		1	*	*	*	*	34	6
0871		0		4730-289-0147	BUSHING, PIPE: STRAINER TO HOSE CONNECTOR			EA		1	*	*	*	*	33	52
0872		0		4730-278-2538	CLAMP, HOSE: SUCTION HOSE	81336	D13200E5399-29	EA		2	*	*	*	*	33	45
0873	X2	0			CLIP, HOSE: LINE STRAINER TUBE SUPPORT	82254	CLA3171	EA		1	*	*	*	*	33	19
0874	X2	0		4820-845-1096	COCK, DRAIN: PUMP OUTLET LINE	81336	D13200E5430-4	EA		1	*	*	*	*	29	35
0875	X2	0			CONNECTOR, HOSE, PIPE: HOSE STRAINER AND INLET HOSE, BRASS, 3/8-18 THD SIZE ONE END, OTHER END 3/8 IN. ID HOSE	81336	D13200E5399-12	EA		2	*	*	*	*	33	53
0876	X2	0			CONNECTOR, HOSE, PIPE: PUMP TO CONTROL PANEL	81336	D13200E5399-20	EA		1	SEE	GRP 9901			33	29
0877	X2	0			CONNECTOR, HOSE, PIPE: SPRAY LINE	81336	D13200E5399-20	EA		1	SEE	GRP 9901			34	7
0878		0		4730-287-1614	COUPLING, PIPE: PRESSURE TUBE ELBOW TO EXHAUST FLANGE			EA		1	*	*	*	*	30	21
0879		0		4730-289-0587	COUPLING, PIPE: THREE WAY VALVE, BY-PASS			EA		3	*	*	*	*	33	2
0880	X2	0			CROSS, PIPE: SPRAY NOZZLE TUBES, BRASS, ALL ENDS MALE, 1/8-27 THD SIZE	81336	D13200E5341-4	EA		2	*	*	*	*	34	12
0881	X2	0			ELBOW, HOSE: PLASTIC HOSE CONNECTION	81336	D13200E5399-19	EA		1	SEE	GRP 9901			29	37
0882	X2	0			ELBOW, HOSE: REAR OF PANEL, BY-PASS, THREE-WAY VALVE STRAINER	81336	D13200E5399-19	EA		4	SEE	GRP 9901			33	1
0883		0		4730-277-5553	ELBOW, PIPE: AIR PRESSURE GAGE, TEE THREE-WAY VALVE			EA		4	*	*	*	*	33	59
0884		0		4730-249-3882	ELBOW, PIPE: AIR PRESSURE VALVE			EA		2	*	*	*	*	33	61
0885		0		4730-814-4132	ELBOW, PIPE TO TUBE: AIR PRESSURE LINE	30327	269P	EA		2	*	*	*	*	33	3
0886		0		4730-814-4132	ELBOW, PIPE TO TUBE: PRESSURE TUBE TO EXHAUST FLANGE	30327	269P	EA		1	*	*	*	*	30	20
0887	X2	0			ELBOW, PIPE TO TUBE: SPRAY NOZZLE, BRASS, ONE END FEMALE, 5/16-24 THD SIZE, OTHER END MALE, 1/8-27 THD SIZE	81336	D13200E5341-7	EA		2	*	*	*	*	34	19
0888		0		4730-814-4132	ELBOW, PIPE TO TUBE: SPRAY TO CROSS	30327	269P	EA		2	*	*	*	*	34	13
0889	X2	0			HOSE: BY-PASS TO SUPPLY TANK, PLASTIC, 10 FT LG	81336	D13200E5399-32	EA		1	*	*	*	*	33	72
0890	M	0			HOSE: INTAKE, SUCTION	81336	D13200E5399-31	EA		1					33	54
0890A	P	0		4730-289-4869	MANUFACTURE FROM: HOSE, RUBBER (10 FT REQUIRED)			FT			SEE	GRP 9900				
0992		0		4730-014-4574	LOCKNUT, PIPE: AIR PRESSURE VALVE TO MANOMETER			EA		2	*	*	*	*	33	4
0993		0		4730-014-4574	LOCKNUT, PIPE: CLOSE NIPPLE TO SPRAY MANIFOLD			EA		2	*	*	*	*	34	18
0994		0		4730-014-4574	LOCKNUT, PIPE: NIPPLE LOCKING			EA		2	*	*	*	*	30	22
0995		0		4730-390-0138	LOCKNUT, PIPE: SUCTION HOSE CONNECTOR AT LINE STRAINER	30327	111B	EA		1	*	*	*	*	33	55

LINE NO.	(1) SOURCE, MAINT. AND RECOV. CODE (a) SOURCE	(b) MAINT.	(c) RECOV.	(2) FEDERAL STOCK NUMBER	(3) DESCRIPTION	MANUFACTURER'S CODE	MANUFACTURER'S PART NUMBER	(4) UNIT OF ISSUE	(5) QTY INC IN UNIT PACK	(6) QTY INC IN UNIT	(7) 15 DAY ORG. MAINT. ALW. (a) 1-5	(b) 6-20	(c) 21-50	(d) 51-100	(8) ILLUSTRATION (a) FIG. NO.	(b) ITEM OR SYM. NO.
0996		0		4730-014-4575	LOCKNUT, PIPE: THREE-WAY VALVE, BY-PASS, FLOW CONTROL			EA		5	*	*	*	*	33	28
0997		0		4730-188-1854	NIPPLE, PIPE: FLOW CONTROL ELBOW			EA		1	*	*	*	*	33	56
0998		0		4730-196-1974	NIPPLE, PIPE: FLOW CONTROL VALVE TO TEE	82254	CFA40615	EA		1	*	*	*	*	33	66
0999		0		4730-293-3593	NIPPLE, PIPE: FLOW METER			EA		2	*	*	*	*	33	33
1000		0		4730-230-1996	NIPPLE, PIPE: PRESSURE TUBE ELBOW TO EXHAUST FLANGE			EA		1	*	*	*	*	30	23
1001		0		4730-230-1996	NIPPLE, PIPE: SPRAY MANIFOLD			EA		2	*	*	*	*	34	17
1002	X2	0			NIPPLE, PIPE: TEE TO BUSHING	81336	D13200E5399-13	EA		1	*	*	*	*	29	34
1003	X2	0			NIPPLE, PIPE: THREE WAY VALVE, 1/4-18 THD SIZE, 1 5/8 IN. LG, SPECIAL	82254	CFA40023	EA		2	*	*	*	*	33	60
1004		0		5305-276-7951	SCREW, MACHINE: TO HOSE CLIP			EA		1	*	*	*	*	33	20
1005	X2	0			STRAINER ASSEMBLY, HOSE	82254	CFR40587	EA		1	*	*	*	*		
1006	X1				BODY, STRAINER	82247	4652-2	EA		1					33	51
1007	X2	0			CAP, END	93146	4649	EA		1	*	*	*	*	33	47
1008	X2	0			SCREEN, STRAINER	82247	3910	EA		1	*	*	*	*	33	49
1009		0		5305-011-3975	SCREW, MACHINE: CAP TO BODY MTG			EA		1	*	*	*	*	33	46
1010	X2	0			SPRING, INNER	93146	4263	EA		1	*	*	*	*	33	50
1011	X2	0			SPRING, OUTER	93146	4296	EA		1	*	*	*	*	33	48
1012	X2	0			STRAINER ASSEMBLY, LINE	82247	A3-4ATWB	EA		1	*	*	*	*		
1013	X1				BODY, STRAINER	82247	5850	EA		1					33	16
1014	X2	0			CAP, STRAINER	82247	5851	EA		1	*	*	*	*	33	12
1015	X2	0			GASKET: STRAINER SCREEN TO BODY	82247	5852	EA		1	*	*	*	*	33	14
1016		0		4730-044-4693	PLUG, PIPE: STRAINER BODY CAP			EA		1	*	*	*	*	33	13
1017	X2	0			SCREEN, STRAINER	82247	4537A3-44TW	EA		1	*	*	*	*	33	11
1018		0		4730-278-4034	TEE, PIPE: FLOW CONTROL VALVE			EA		1	*	*	*	*	33	58
1019	X2	0			TEE, PIPE: PUMP OUTLET LINE	81336	D13200E5430-8	EA		1	*	*	*	*	29	36
1020	X2	0			TEE, PIPE: SPRAY NOZZLE TUBE CONNECTION, BRASS, ONE END, MALE, 1/8-27 THD SIZE, OTHER ENDS, PLASTIC TUBE CONNECTION, 1/4 IN. OD TUBE, 5/16-24 THD SIZE	81336	D13200E5341-3	EA		4	*	*	*	*	34	14
1021	X2	0			TEE, PIPE TO TUBE: INSECTICIDE TUBE, BRASS, ONE END MALE, 1/8-27 THD SIZE, OTHER ENDS MALE, 5/16-24 THD SIZE	81336	D13200D5341-9	EA		1	*	*	*	*	34	5
1022	X2	0			TUBE ASSEMBLY: ELBOW TO SPRAY NOZZLE, TEFLON, 13 IN. LG	81336	D13200E5341-1	EA		10	*	*	*	*	34	15
1023	M	0			TUBE ASSEMBLY: INSECTICIDE	81336	D13200E5341-8	EA		2					34	9
					MANUFACTURE FROM:											
1023A		0		4730-278-8365	NUT, TUBE COUPLING			EA		2	*	*	*	*		
1023B		0		4730-278-8829	NUT, TUBE COUPLING			EA		2	*	*	*	*		
1023C	P	0		5330-362-1562	PACKING, PREFORMED			EA		2	*	*	*	*	34	8
1023D	X2	0		4730-200-0273	SLEEVE, COMPRESSION			EA			*	*	*	*		
1023E	P	0		4710-277-5526	TUBE, COPPER (10 3/4 IN. REQUIRED FOR EACH TUBE ASSEMBLY)			FT			SEE GRP 9501					

LINE NO.	(1) SOURCE, MAINT. AND RECOV. CODE (a) SOURCE	(b) MAINT.	(c) RECOV.	(2) FEDERAL STOCK NUMBER	(3) DESCRIPTION	MANUFACTURER'S CODE	MANUFACTURER'S PART NUMBER	(4) UNIT OF ISSUE	(5) QTY INC IN UNIT PACK	(6) QTY INC IN UNIT	(7) 15 DAY ORG. MAINT. ALW. (a) 1-5	(b) 6-20	(c) 21-50	(d) 51-100	(8) ILLUSTRATION (a) FIG. NO.	(b) ITEM OR SYM. NO.
1024	X2	0			TUBE, FLUID: PUMP TO STRAINER AND PANEL, TEFLON, 3/8 IN. OD, 1/4 IN. ID, 3 FT 7 IN. LG	81336	D13200E5399-27	EA		2	*	*	*	*	33	18
1025	X2	0			TUBE, FLUID: THREE WAY VALVE TO SUPPLY BY-PASS TEFLON, 1/4 IN. ID, 3/8 IN. OD, 13 1/2 IN. LG	81336	D13200E5399-26	EA		1	*	*	*	*	33	22
1026	X2	0			TUBE, TEFLON: THREE-WAY VALVE TO MANIFOLD HEAD, 1/4 IN. ID, 3/8 IN. OD, 5 FT LG	81336	D13200E5399-25	EA		1	*	*	*	*	33	21
1027	M	0			TUBE, VINYL: AIR PRESSURE LINE FROM PRESSURE VALVE TO AIR BLOWER	81336	D13200E5399-23	EA		1					33	23
1027A	P	0		4710-809-8149	MANUFACTURE FROM: PLASTIC, TUBING (22 IN. REQUIRED)			FT			SEE GRP 9501					
1028	X2	0			UNION, HALF: BY-PASS HOSE	81336	D13200E5399-11	EA		1	SEE GRP 9501				33	57
1029	X2	0			UNION, HALF: INLET LINE	81336	D13200E5399-11	EA		1	SEE GRP 9501				29	30
1030	X2	0			VALVE, NEEDLE: FLOW CONTROL, 1/4-18 THD SIZE	81336	D13200E5399-17	EA		1	*	*	*	*	33	44
1031		0		5310-012-0361	NUT, PLAIN, HEXAGON: WHEEL MTG			EA		1	*	*	*	*	33	24
1032	X1				WHEEL, FLOW VALVE	04959	STYLEFX1-3-4	EA		1					33	43
1033	X2	0			VALVE, THREE WAY: FLOW CONTROL, BRASS, 1/4-18 THD SIZE	81336	D13200E5399-5	EA		1	*	*	*	*	33	63
1034		0		5305-206-8263	SCREW, MACHINE: POINTER TO VALVE			EA		1	*	*	*	*	33	64
1035					GROUP 95 - GENERAL USE STANDARDIZED PARTS											
1036					9501 - BULK MATERIAL											
1037	P	0		2990-085-9035	CHAIN, WELDLESS: PHOSPHATE FINISH, 0.062 IN. ID, 23 LINKS PER FIT	82254	CFR40829	FT			*	*	*	*		
1039	P	0		4720-289-4869	HOSE, RUBBER: 3/8 IN. ID, 50 FT LG (GE)			FT			*	*	*	*		
1040	P	0		4720-218-5644	HOSE, RUBBER: 1 1/2 IN. ID	66289	LL125	FT			*	*	*	*		
1041	P	0		5330-270-8469	PAPER, GASKET: 36 IN. W, 1/32 IN. THK			YD			*	*	*	*		
1042	P	0		4710-162-0991	PIPE, STEEL: 1 1/4 IN. ID	81336	A13200E5434	FT			*	*	*	*		
1043	P	0		4710-809-8149	PLASTIC TUBING: 1/4 IN. DIA	81326	D13200E5399-24	FT			*	*	*	*		
1044	P	0		5330-505-6611	RUBBER SHEET, SOLID: 1/16 IN. THK, 24 IN. W	81336	D13200E5420-1	FT			*	*	*	*		
1045	P	0		9515-554-0893	STEEL STRIP, CARBON, HOT ROLLED: 1/8 IN. THK, 1 1/4 IN. W	81336	D13200E5419	FT			*	*	*	*		
1046	P	0		9515-529-0429	STEEL STRIP, CARBON, HOT ROLLED: 1/8 IN. THK, 2 IN. W			FT			*	*	*	*		
1047	P	0		4710-277-5525	TUBE, COPPER: 0.250 IN. DIA			FT			*	*	*	*		
1048	P	0		4710-277-5526	TUBE, COPPER: 5/16 IN. DIA			FT			*	*	*	*		
1049	P	0		6145-295-0804	WIRE, ELECTRICAL: COPPER, TINNED FINISH, No. 12 AWG, 19 STRANDS OF No. 25 AWG, 0.155 IN. DIA			FT			*	*	*	*		
1050	P	0		6145-164-7033	WIRE, ELECTRICAL: COPPER, TINNED FINISH, No. 14 AWG, 19 STRANDS OF No. 27 AWG, 0.115 IN. DIA			FT			*	*	*	*		

LINE NO.	(1) SOURCE, MAINT. AND RECOV. CODE (a) SOURCE	(b) MAINT.	(c) RECOV.	(2) FEDERAL STOCK NUMBER	(3) DESCRIPTION	MANUFACTURER'S CODE	MANUFACTURER'S PART NUMBER	(4) UNIT OF ISSUE	(5) QTY INC IN UNIT PACK	(6) QTY INC IN UNIT	(7) 15 DAY ORG. MAINT. ALW. (a) 1-5	(b) 6-20	(c) 21-50	(d) 51-100	(8) ILLUSTRATION (a) FIG. NO.	(b) ITEM OR SYM. NO.
1051	P	O		6145-164-7023	WIRE, ELECTRICAL: COPPER, TINNED FINISH, No. 16 AWG, 19 STRANDS, 0.102 IN. DIA	70903	1941	FT			*	*	*	*		
1052					GROUP 99 - PARTS PECULIAR											
1052A					9901 - MULTI-LISTED PARTS											
1053	X2	O			CONNECTOR, HOSE, PIPE: 3/8-24 THD SIZE ONE END, OTHER END, 1/2-18 THD SIZE	81336	D13200E5399-20	EA		2	*	*	*	*		
1054	X2	O			ELBOW, HOSE: ONE END, 3/8-24 THD SIZE, OTHER END, 1/4-18 THD SIZE	81336	D13200E5399-19	EA		5	*	*	*	*		
1055	P	O		2805-641-7404	GASKET			EA		2	*	2	2	3		
1057	X2	O			UNION, HALF: BRASS, ONE END, 1/4-18 THD SIZE, OTHER END 3/8-24 THD SIZE	81336	D13200E5399-11	EA		2	*	*	*	*		

LINE NO.	(1) SOURCE, MAINT. AND RECOV. CODE (a) SOURCE	(b) MAINT.	(c) RECOV.	(2) FEDERAL STOCK NUMBER	(3) DESCRIPTION	MANUFACTURER'S CODE	MANUFACTURER'S PART NUMBER	(4) UNIT OF ISSUE	(5) QTY INC IN UNIT PACK	(6) QTY INC IN UNIT	(7) 15 DAY ORG. MAINT. ALW. (a) 1-5	(b) 6-20	(c) 21-50	(d) 51-100	(8) ILLUSTRATION (a) FIG. NO.	(b) ITEM OR SYM. NO.
1058					PART II											
1058A					GROUP 01 - ENGINE											
1066					0102 - CRANKSHAFT											
1067	X2	0			SHEAVE, CRANKSHAFT: BLOWER DRIVE	82254	CFR40088	EA		1	*	*	*	*	4	4
1070					0106 - ENGINE LUBRICATION SYSTEM											
1072		0		4730-278-4323	ADAPTER, STRAIGHT, PIPE TO TUBE: TEE TO GOVERNOR OIL LINE	66289	RF269	EA		1	*	*	*	*	10	16
1073		0		5306-543-4308	BOLT, MACHINE: FILTER MTG			EA		4	*	*	*	*	10	22
1074	X2	0			FILTER ASSEMBLY, OIL	73370	F3P	EA		1	*	*	*	*	10	
1075	X1				BODY ASSEMBLY	73370	8134	EA		1					10	20
1076	X2	0			COVER ASSEMBLY	73370	8113	EA		1	*	*	*	*	10	14
1077	X1				COVER, FILTER	73370	102033	EA		1					10	10
1078	X2	0		5330-056-9588	GASKET: FIBER	73370	102032	EA		1	*	*	*	*	10	9
1079	X1				HANDLE ASSEMBLY	73370	8112	EA		1					10	7
1080	X2	0			RING, SNAP	73370	102483	EA		1	*	*	*	*	10	11
1081	X2	0		5310-417-8620	WASHER, SHOULDERED	73370	10776	EA		1	*	*	*	*	10	13
1082	X2	0			SPRING, COMPRESSION	73370	10208	EA		1	*	*	*	*	10	12
1083	P	0		5330-298-0776	WASHER, NONMETALLIC: COVER SCREW	73370	10076	EA		1	*	*	*	2	10	8
1084	P	0		2940-529-2738	FILTER ELEMENT, FLUID, PRESSURE: OIL	73370	6946	EA		1	2	7	13	25	10	23
1085		0		5310-368-1908	NUT, PLAIN, SQUARE: OIL FILTER STRAP	73370	13446	EA		1	*	*	*	*	10	5
1086		0		5305-013-3083	SCREW, MACHINE: OIL FILTER STRAP	73370	12398	EA		1	*	*	*	*	10	21
1087	X2	0			STRAP, BODY	73370	10757	EA		1	*	*	*	*	10	3
1088		0		5310-368-1911	WASHER, LOCK: OIL FILTER STRAP	73370	10124	EA		1	*	*	*	*	10	4
1089	P	0		5330-291-3405	WASHER, NONMETALLIC: COVER	73370	10611	EA		1	2	7	13	25	10	6
1090	P	0		2940-606-6816	HOSE ASSEMBLY, RUBBER: OIL LINE, PRESSURE	66289	RM1299	EA		1	*	*	*	*	10	24
1091	M	0			LINE ASSEMBLY, OIL: CRANKCASE TO GOVERNOR	66289	RM796	EA		1					10	25
					MANUFACTURE FROM:											
1092		0		4730-011-6452	NUT, TUBE COUPLING	79470	1110X4	EA		2	*	*	*	*		
1092A	P	0		4710-277-5525	TUBE, COPPER (6 1/2 IN. REQUIRED)			FT			SEE	GRP	9501			
1093		0		5310-176-8160	NUT, PLAIN, HEXAGON: FILTER MTG			EA		4	*	*	*	*	10	1
1094		0		4730-603-4470	TEE, PIPE: OIL FILTER INLET	66289	RF1301	EA		1	*	*	*	*	10	15
1095		0		5310-596-4911	WASHER, LOCK: FILTER MTG	66289	PE4	EA		4	*	*	*	*	10	2
1096					GROUP 03 - FUEL SYSTEM											
1096A					0309 - FUEL FILTERS											
1097	X2	0		4730-639-9638	STRAINER ASSEMBLY	78480	CW480T	EA		1	*	*	*	*		
1098	X1				BAIL ASSEMBLY	78480	07766	EA		1					16	20
1099	P	0		2910-358-4317	BOWL, SEDIMENT, FUEL: GLASS	78480	07759	EA		1	*	*	2	2	16	19
1100	X1			2910-305-5749	COVER, STRAINER	78480	07770	EA		1					16	16

LINE NO.	(1) SOURCE, MAINT. AND RECOV. CODE (a) SOURCE	(b) MAINT.	(c) RECOV.	(2) FEDERAL STOCK NUMBER	(3) DESCRIPTION	MANUFACTURER'S CODE	MANUFACTURER'S PART NUMBER	(4) UNIT OF ISSUE	(5) QTY INC IN UNIT PACK	(6) QTY INC IN UNIT	(7) 15 DAY ORG. MAINT. ALW. (a) 1-5	(b) 6-20	(c) 21-50	(d) 51-100	(8) ILLUSTRATION (a) FIG. NO.	(b) ITEM OR SYM. NO.
1101	P	0		2910-358-5327	SCREEN, FUEL STRAINER	78480	07762	EA		1	*	*	*	*	16	17
1102	X1			2910-368-6657	VALVE, FUEL REGULATING: SHUT OFF	78480	07769	EA		1					16	21
1103	P	0		2910-282-7557	WASHER, NONMETALLIC: BOWL MTG	78480	08227	EA		1	2	2	4	8	16	18
1108					GROUP 06 - ELECTRICAL SYSTEM											
1108A					0605 - IGNITION COMPONENTS											
1109	P	0		2920-566-7806	CABLE, SPECIAL PURPOSE	66289	YD212D	EA		2	*	*	*	*	2	4
1110	X2	0		5340-447-9222	CLAMP, CABLE: SPARK PLUG WIRES	66289	PG314	EA		1	*	*	*	*	2	1
1111	P	0	R	2920-800-8156	MAGNETO ASSEMBLY (INCLUDES COMPONENTS OF REPAIR KIT, STOCK NO. 2920-712-1267)	79575	XHS2484	EA		1	*	*	*	*	22	
1112	X1			2930-353-6609	BEARING, SLEEVE: DRIVE CUP	79575	5518	EA		1					22	4
1113	X1			2920-374-3481	BEARING UNIT, BALL, CYLINDRICAL CARTRIDGE: ROTOR SHAFT	79575	X7672	EA		1						
1114	X1			3110-144-8882	BEARING, BALL ANNULAR: ROTOR	79575	7617	EA		1					22	6
1115	X1			2920-353-6611	RETAINER, BALL BEARING	79575	5567	EA		1					22	5
1116	X1				BRACKET, TERMINAL	79575	X7724	EA		1					22	57
1117	X1			2920-367-7985	CLAMP, ELECTRICAL: COIL CORE	79575	5633	EA		2					22	19
1118	X1			2920-335-4178	COIL, MAGNETO	79575	X7895	EA		1					22	21
1119	X1			4920-428-3751	CORE ASSEMBLY: MAGNETO COIL	79575	X5524	EA		1					22	22
1120	X1			2920-607-1324	COUPLING, MAGNETO: IMPULSE	79575	X8774	EA		1						
1121	X1			2920-366-6296	ARM, TRIP	79575	A179X	EA		1					22	33
1122	X1			2920-368-6715	CUP, MAGNETO DRIVE	79575	2061A	EA		1					22	26
1123	X1			2920-740-2845	FLANGE, DRIVEN GROUP	79575	X6586	EA		1					22	35
1124	X1				NUT, IMPULSE LOCK	79575	8739	EA		1					22	28
1125	X1			2920-366-6306	RETAINER, DRIVE SPRING	79575	2288	EA		1					22	31
1126	X1			2920-367-7999	RING, LOCK: RETAINING, IMPULSE COUPLING	79575	6424	EA		1					22	24
1127	X1			2920-662-9135	SPACER, DRIVE FLANGE	79575	2122	EA		1					22	34
1128	X1			5340-353-6606	SPRING, SPIRAL, TENSION: IMPULSE COUPLING	79575	15-186	EA		1					22	27
1129	X1			5340-740-2871	SPRING, TRIP ARM	79575	6585	EA		1					22	32
1130	X1			2920-740-2846	WASHER: DRIVE CUP SPACER	79575	7908	EA		1					22	29
1131	X1			5310-187-3458	WASHER, FLAT: DRIVE FLANGE	79575	M42XA	EA		1					22	30
1132	X1			5310-353-6620	WASHER, KEY	79575	6425	EA		1					22	25
1133	X1			2920-787-0480	COVER, UNIT	79575	X7910	EA		1					22	16
1134	X1				ROD GROUP, GROUND	79575	X7867	EA		1					22	48
1135	X1			2920-598-9432	SPRING, HELICAL, COMPRESSION	79575	6732	EA		2					22	50
1136	X1			5305-276-7951	SCREW, MACHINE: TERMINAL BLOCK MTG			EA		3					22	13
1137	X1			5940-314-0255	TERMINAL BLOCK: HIGH TENSION	79575	X7892	EA		1					22	15
1138	X1			5310-013-5830	WASHER, LOCK: TERMINAL BLOCK MTG			EA		3					22	14
1139	X1			8305-740-2859	FELT, STRIP: BREAKER ARM	79575	7644	EA		1					22	58
1140	X1			5330-297-4578	GASKET: IMPULSE STOP	79575	5519	EA		1					22	42

LINE NO.	(1) SOURCE, MAINT. AND RECOV. CODE (a) SOURCE	(b) MAINT.	(c) RECOV.	(2) FEDERAL STOCK NUMBER	(3) DESCRIPTION	MANUFACTURER'S CODE	MANUFACTURER'S PART NUMBER	(4) UNIT OF ISSUE	(5) QTY INC IN UNIT PACK	(6) QTY INC IN UNIT	(7) 15 DAY ORG. MAINT. ALW. (a) 1-5	(b) 6-20	(c) 21-50	(d) 51-100	(8) ILLUSTRATION (a) FIG. NO.	(b) ITEM OR SYM. NO.
1141	X1			2920-360-8381	GASKET: MAGNETO MTG (COMPONENT OF GASKET SET, STOCK NO. 2805-720-4773, SEE GROUP 0100, PART 1) (CAN BE MANUFACTURED FROM PAPER, STOCK NO. 5330-233-5056)	66289	QD616	EA		1					22	3
1142	X1				GEAR, DRIVE	79575	6957	EA		1					22	23
1143	X1				HOUSING, MAIN: MAGNETO	79575	X8598	EA		1					22	11
1144	X1				LEAD, ELECTRICAL: BREAKER TO CAPACITOR	79575	X7872	EA		1					22	55
1145	X1			5310-012-0614	NUT, PLAIN, HEXAGON: IMPULSE STOP SET SCREW LOCKING			EA		1					22	38
1146	X1			2510-039-7699	PLATE, IMPULSE STOP	79575	X8555	EA		1					22	37
1147	X1				PLATE, NAME: MAGNETO	79575	8792	EA		1	SEE GRP 2210					
1148	X1			2920-740-2873	ROTOR	79575	Y7569	EA		1					22	10
1149	X1			5305-281-8308	SCREW, ASSEMBLED WASHER: BREAKER CLAMP, CONTACT MTG, CORE CLAMP MTG	79575	5411	EA		4					22	20
1150	X1			5305-639-6026	SCREW, ASSEMBLED WASHER: TERMINAL BRACKET MTG	79575	5900	EA		1					22	56
1151	X1			5305-335-4180	SCREW, DRIVE: NAMEPLATE MTG	79575	5250	EA		2	SEE GRP 2210					
1152	X1			5305-424-2999	SCREW, MACHINE: COVER MTG	79575	5622	EA		3					22	18
1153	X1			5305-022-5561	SCREW, MACHINE: IMPULSE STOP CLAMP	79575	6465	EA		4					22	41
1154	X1			5305-638-6834	SETSCREW: IMPULSE STOP			EA		1					22	39
1155	X1			2920-353-6614	SHIELD, BALL BEARING	79575	5926	EA		1					22	8
1156	X1			2920-353-6610	SPACER, SLEEVE: BEARING GAGE	79575	5520	EA		1					22	9
1157	X1			5310-275-1353	WASHER: COVER MTG	79575	1XA256	EA		3					22	17
1158	X1			5310-188-4185	WASHER, FLAT: BREAKER ARM PIVOT	79575	3219	EA		1					22	52
1159	X1			5310-351-0698	WASHER, FLAT: BREAKER POINT ALIGNING	79575	5717	EA		1					22	59
1160	X1				WASHER, FLAT: POINT ALIGNMENT STEEL, CADMIUM OR ZINC PLATED, 3/16 ID, 5/16 OD, 0.004 IN. THK	66289	10407	EA		1					22	51
1161	X1			5310-012-1744	WASHER, LOCK: IMPULSE STOP CLAMP			EA		4					22	40
1162	X1			5330-262-3306	WICK: CAM WIPER, FELT	79575	6984	EA		1					22	54
1163		O		5310-012-0377	NUT, PLAIN, HEXAGON: MAGNETO MTG			EA		1	*	*	*	*	22	44
1164	P	O		2920-712-1267	REPAIR KIT, MAGNETO	81336	79575-4	EA		1	*	2	2	3	22	
1165	X1			2920-662-9133	BEARING, SLEEVE: BREAKER PLATE	79575	5610	EA		1					22	46
1166	X1			5910-740-2855	CONDENSER, CAP	79575	X7720	EA		1					22	49
1167	X1			2920-740-2882	CONTACT SET, DISTRIBUTOR	79575	X8551	EA		1					22	47
1168	X1			2920-428-3830	DEFLECTOR, DIRT AND OIL	79575	6204	EA		1					22	36
1169	X1			2920-740-2852	GASKET: COVER, LEAD	79575	7871	EA		1					22	12
1170	X1			5315-367-7994	PIN, LOCK: BREAKER ARM	79575	4210	EA		1					22	53
1171	X1			5340-281-6688	RING, RETAINING: ROTARY BEARINGS	79575	5516	EA		1					22	7
1172	X1			2920-353-6618	SEAL, PLAIN: OIL	79575	6199	EA		1					22	43
1173		O		5305-269-3217	SCREW, CAP, HEXAGON HEAD: MAGNETO MTG			EA		2	*	*	*	*	22	1
1174		O		5305-584-8736	SCREW, MACHINE: CABLE CLAMP ATTACHMENT	66289	XA33	EA		1	*	*	*	*	2	3
1175	P	O		2920-293-5212	SPARK PLUG: 18 MM	11583	XED16	EA		2	2	3	5	10	2	6
1176	P	O		5330-599-5356	GASKET: SPARK PLUG	11583	A676	EA		2	*	2	2	3	2	5
1177		O		5310-543-2705	WASHER, LOCK: CABLE CLAMP ATTACHMENT			EA		1	*	*	*	*	2	2
1178		O		5310-582-9930	WASHER, LOCK: MAGNETO MTG	66289	PE76A	EA		2	*	*	*	*	22	2
1179		O		5310-627-6128	WASHER, LOCK: MAGNETO MTG	66289	PE56A	EA		1	*	*	*	*	22	45

LINE NO.	(1) SOURCE, MAINT. AND RECOV. CODE (a) SOURCE	(b) MAINT.	(c) RECOV.	(2) FEDERAL STOCK NUMBER	(3) DESCRIPTION	MANUFACTURER'S CODE	MANUFACTURER'S PART NUMBER	(4) UNIT OF ISSUE	(5) QTY INC IN UNIT PACK	(6) QTY INC IN UNIT	(7) 15 DAY ORG. MAINT. ALW. (a) 1-5	(b) 6-20	(c) 21-50	(d) 51-100	(8) ILLUSTRATION (a) FIG. NO.	(b) ITEM OR SYM. NO.
1180					GROUP 22 - BODY CHASSIS OR HULL AND ACCESSORY ITEMS											
1180A					2210 - DATA PLATES											
1181	X2	0		2805-685-6019	PLATE, INSTRUCTION: ENGINE OPERATION	66289	SD153	EA		1	*	*	*	*		
1182	X2	0			PLATE, INSTRUCTION: MILITARY STANDARD PARTS	66289	SD197A	EA		1	*	*	*	*		
1183	X2	0			PLATE, NAME: MAGNETO	79575	8792	EA		1	*	*	*	*		
1184		0		5305-335-4180	SCREW, DRIVE: NAMEPLATE MTG	79575	5250	EA		2	*	*	*	*		
1185					GROUP 57 - SPRAY EQUIPMENT COMPONENTS											
1185A					5703 - AIR BLOWER ASSEMBLY											
1186	X2	0			FILTER, SILENCER: AIR BLOWER	00736	BW8GS	EA		1	*	*	*	*	32	
1187	X1				BODY, FILTER	00736	BW8GS825	EA		1					32	5
1188	X2	0			ELEMENT, FILTER SILENCER	00736	BW8-826	EA		1	*	*	*	*	32	6
1189	P	0		3740-542-3716	GASKET: ELEMENT TO BODY AND TOP	00736	10406	EA		2	*	*	*	2	32	4
1190		0		5310-010-3129	NUT, PLAIN, WING: TOP TO BODY	00736	39SYZ20	EA		1	*	*	*	*	32	1
1191	X2	0			TOP ASSEMBLY	00736	BW8-800	EA		1	*	*	*	*	32	8
1192	M	0			FELT: TOP ASSEMBLY	00736	540-16	EA		1					32	7
1192A	P	0		5330-191-1096	MANUFACTURE FROM: FELT SHEET (7 IN. X 7 IN. REQUIRED)			SH			SEE GRP 9501					
1193		0		5310-366-6294	WASHER, FLAT: TOP TO BODY			EA		1	*	*	*	*	32	3
1194		0		5310-013-8542	WASHER, LOCK: TOP TO BODY	66289	PE80A	EA		1	*	*	*	*	32	2
1195					5704 - SPRAY DUCTS AND MANIFOLDS											
1196	X2	0			MANIFOLD SPRAY ASSEMBLY	81336	D13200E5341	EA		1	*	*	*	*		
1197	X2	0			CLAMP, DRUM	81336	C13200E5358	EA		5	*	*	*	*	34	2
1198	X2	0			ELBOW, LONG	81336	B13200E5350	EA		1	*	*	*	*	34	10
1199	X2	0			ELBOW, SHORT	81336	B13200E5353	EA		1	*	*	*	*	34	11
1200	X2	0			END CAP	81336	B13200E5347	EA		2	*	*	*	*	34	1
1201	X2	0			NOZZLE HEAD	81336	C13200E5342	EA		1	*	*	*	*	34	4
1202	X2	0			SCREW, TOGGLE: CLAMP DRUM CLAMPING	81336	A13200E5359	EA		5	*	*	*	*	34	3
1203	X2	0		3440-977-8672	NOZZLE ASSEMBLY: SPRAY	81336	A13200E5362	EA		10	*	*	*	*	34	16
1204					GROUP 95 - GENERAL USE STANDARDIZED PARTS											
1204A					9501 - BULK MATERIAL											
1205	P	0		5330-191-1096	FELT SHEET: 1/4 IN. THK, 30 IN. W, 36 IN. LONG	00736	540-16	SH			*	*	*	*		

LINE NO.	(1) SOURCE, MAINT. AND RECOV. CODE (a) SOURCE	(b) MAINT.	(c) RECOV.	(2) FEDERAL STOCK NUMBER	(3) DESCRIPTION	MANUFACTURER'S CODE	MANUFACTURER'S PART NUMBER	(4) UNIT OF ISSUE	(5) QTY INC IN UNIT PACK	(6) QTY INC IN UNIT	(7) 15 DAY ORG. MAINT. ALW. (a) 1-5	(b) 6-20	(c) 21-50	(d) 51-100	(8) ILLUSTRATION (a) FIG. NO.	(b) ITEM OR SYM. NO.
1206					PART III											
1206A					GROUP 01 - ENGINE											
1206B					0100 - ENGINE ASSEMBLY											
1212	X2	0			EXTENSION, OIL DRAIN	82254	CFR40975	EA		1	*	*	*	*		
1215					0102 - CRANKSHAFT											
1216	X2	0			SHEAVE, CRANKSHAFT: BLOWER DRIVE	82254	CFR40088	EA		1	*	*	*	*	4	4
1219					0106 - ENGINE LUBRICATION SYSTEM											
1220		0		4730-278-4323	ADAPTER, STRAIGHT, PIPE TO TUBE: TEE TO GOVERNOR OIL LINE	66289	RF269	EA		1	*	*	*	*	10	16
1221		0		5306-543-4308	BOLT, MACHINE: FILTER MTG			EA		4	*	*	*	*	10	22
1223	X2	0		2940-358-2536	FILTER, FLUID, PRESSURE: OIL	66289	RV28	EA		1	*	*	*	*	10	
1224	X1				BODY ASSEMBLY	73370	5310	EA		1					10	20
1225	X2	0		2940-393-5988	COVER ASSEMBLY	73370	5241	EA		1	*	*	*	*	10	14
1226	X1				COVER, FILTER	73370	102033	EA		1					10	10
1227	X2	0		5330-056-9588	GASKET: FIBER	73370	102032	EA		1	*	*	*	*	10	9
1228	X1				HANDLE ASSEMBLY	73370	8112	EA		1					10	7
1229	X2	0			RING, SNAP	73370	102483	EA		1	*	*	*	*	10	11
1230	X2	0		5310-417-8620	WASHER, SHOULDERED	73370	10776	EA		1	*	*	*	*	10	13
1231	X2	0			SPRING, COMPRESSION	73370	10208	EA		1	*	*	*	*	10	12
1232	P	0		5330-298-0776	WASHER, NONMETALLIC: COVER SCREW	73370	10076	EA		1	*	*	*	2	10	8
1233	P	0		2940-141-9025	FILTER ELEMENT	73370	C21P2	EA		1	2	7	13	25	10	23
1234	P	0		5330-599-1285	GASKET, COVER WASHER, NONMETALLIC	73370	11582	EA		1	2	7	13	25	10	6
1235		0		5310-368-1908	NUT, PLAIN, SQUARE: OIL FILTER STRAP	73370	13446	EA		1	*	*	*	*	10	5
1236		0		5305-013-3083	SCREW, MACHINE: OIL FILTER STRAP	73370	12398	EA		1	*	*	*	*	10	21
1237	X2	0		2940-732-4214	STRAP: OIL FILTER MTG	73370	11563	EA		1	*	*	*	*	10	3
1238		0		5310-013-8542	WASHER, LOCK: OIL FILTER STRAP	73370	10124	EA		1	*	*	*	*	10	4
1239		0		5310-176-8160	NUT, PLAIN, HEXAGON: FILTER MTG			EA		4	*	*	*	*	10	1
1240		0		4730-603-4470	TEE, PIPE: OIL FILTER INLET	66289	RF1301	EA		1	*	*	*	*	10	15
1241	X2	0		2940-542-3807	TUBE ASSEMBLY, OIL	66289	RM1319G	EA		1	*	*	*	*	10	25
1242		0		5310-596-4911	WASHER, LOCK: FILTER MTG	66289	PE4	EA		4	*	*	*	*	10	2
1243					GROUP 03 - FUEL SYSTEM											
1243A					0306 - TANKS, LINES, FITTINGS											
1244	X2	0			CLIP, FUEL LINE	82254	CFA40970	EA		1	*	*	*	*		
1245	X2	0			NUT: CLIP SCREW	82254	CFA40974	EA		1	*	*	*	*		
1246	X2	0			SCREW: CLIP MTG	82254	CFA40972	EA		1	*	*	*	*		
1247		0		5310-595-7235	WASHER, LOCK: CLIP MTG	96906	MS35333-20	EA		1	*	*	*	*		

LINE NO.	(1) SOURCE, MAINT. AND RECOV. CODE (a) SOURCE	(b) MAINT.	(c) RECOV.	(2) FEDERAL STOCK NUMBER	(3) DESCRIPTION	MANUFACTURER'S CODE	MANUFACTURER'S PART NUMBER	(4) UNIT OF ISSUE	(5) QTY INC IN UNIT PACK	(6) QTY INC IN UNIT	(7) 15 DAY ORG. MAINT. ALW. (a) 1-5	(b) 6-20	(c) 21-50	(d) 51-100	(8) ILLUSTRATION (a) FIG. NO.	(b) ITEM OR SYM. NO.
1248					0309 - FUEL FILTERS											
1249	X2	0		4730-639-9638	STRAINER ASSEMBLY	66289	LP43	EA		1	*	*	*	*		
1250	X1			2910-382-8768	BAIL ASSEMBLY	78480	OW447	EA		1					16	20
1251	P	0		2910-354-3834	BOWL, SEDIMENT, FUEL: GLASS	78480	06137	EA		1	*	*	2	2	16	19
1252	X1			2910-305-5749	COVER, STRAINER	78480	07770	EA		1					16	16
1253	P	0		2910-142-2738	STRAINER ELEMENT, SEDIMENT	78480	OW352	EA		1	*	*	*	*	16	17
1254	X1			2910-368-6657	VALVE, FUEL REGULATING: SHUTOFF	78480	07769	EA		1					16	21
1255	P	0		5330-187-2962	WASHER, NONMETALLIC: BOWL MTG	78480	06096	EA		1	2	2	4	8	16	18
1256					GROUP 04 - EXHAUST SYSTEM											
1256A					0401 - MUFFLER AND PIPES											
1257	X2	0			GUARD, MUFFLER	82254	CFR40870	EA		1	*	*	*	*		
1258		0		5310-584-5005	NUT, PLAIN, HEXAGON: MUFFLER GUARD TO CANOPY	96906	MS35690-405	EA		4	*	*	*	*		
1259		0		5305-637-4028	SCREW, CAP, HEXAGON HEAD: MUFFLER GUARD TO CANOPY	96906	MS35291-3	EA		4	*	*	*	*		
1260		0		5310-011-5544	WASHER, LOCK: MUFFLER GUARD TO CANOPY	96906	MS35333-4	EA		8	*	*	*	*		
1265					GROUP 06 - ELECTRICAL SYSTEM											
1265A					0605 - IGNITION COMPONENTS											
1266	P	0	R	2920-979-3504	MAGNETO (INCLUDES COMPONENTS OF REPAIR KIT, STOCK NO. 2920-844-2035)	66289	Y93DS1	EA		1	*	*	*	*		
1272	X2	0			PLATE, NAME: MAGNETO	82796	A195	EA		1	SEE GRP 2210					
1307	X1			2920-360-8381	GASKET: MAGNETO MTG (COMPONENT OF GASKET SET, STOCK NO. 2805-720-4773, SEE GROUP 0100, PART 1) (CAN BE MANUFACTURED FROM PAPER, STOCK NO. 5330-233-5846)	66289	GD616	EA		1					36	3
1308	X2	0		2990-603-4773	GEAR, HELICAL: DRIVE	66289	GD93C3	EA		1	*	*	*	*	36	4
1309		0		5310-012-0377	NUT, PLAIN, HEXAGON: MAGNETO MTG			EA		1	*	*	*	*	36	24
1310		0		5315-011-2726	PIN, COTTER: DRIVE GEAR			EA		1	*	*	*	*	36	23
1311		0		5305-514-9662	SCREW, CAP, HEXAGON HEAD: MAGNETO MTG			EA		2	*	*	*	*	36	1
1312		0		5310-582-9930	WASHER, LOCK: MAGNETO MTG	66289	PE76A	EA		2	*	*	*	*	36	2
1313		0		5310-595-7237	WASHER, LOCK: MAGNETO MTG	66289	PE56A	EA		1	*	*	*	*	36	22
1314	P	0		2920-844-2035	REPAIR KIT, MAGNETO	82796	SK72	EA		1	*	2	2	3		
1315	X1			2920-142-1888	ARM, CONTACT SET, DISTRIBUTOR	82796	Q2437A	EA		1					36	20
1316	X1			5340-598-3180	CLIP, RETAINING: ROTOR DRIVE SHAFT	82796	D1498D	EA		1					35	3
1317	X1			5340-675-5253	CLIP, RETAINING: SWITCH	82796	C1498G	EA		1					36	9
1318	X1				CONDENSER	82796	QX2433	EA		1					36	16
1319	X1			2920-217-3489	GASKET: END CAP	82796	N2498	EA		1					36	5
1320	X1			5305-281-6387	SCREW, CAP END	82796	10S100	EA		4					36	8
1321	X1				SEAL, CONDENSER	82796	P2473	EA		1					36	15

LINE NO.	(1) SOURCE, MAINT. AND RECOV. CODE (a) SOURCE	(b) MAINT.	(c) RECOV.	(2) FEDERAL STOCK NUMBER	(3) DESCRIPTION	MANUFACTURER'S CODE	MANUFACTURER'S PART NUMBER	(4) UNIT OF ISSUE	(5) QTY INC IN UNIT PACK	(6) QTY INC IN UNIT	(7) 15 DAY ORG. MAINT. ALW. (a) 1-5	(b) 6-20	(c) 21-50	(d) 51-100	(8) ILLUSTRATION (a) FIG. NO.	(b) ITEM OR SYM. NO.
1322	X1			2920-356-1221	SEAL: ROTOR SHAFT	82796	G3861	EA		1					35	5
1323	X1				SPACER, GROUND SWITCH	82796	F4373	EA		1					36	10
1324	X1			5310-794-8555	WASHER, FLAT: RETAINING DRIVE END BEARING	82796	A2492D	EA		1					35	14
1325	X1			5310-205-7981	WASHER, FLAT: ROTOR SHAFT INNER SEAL	82796	A2492C	EA		1					35	4
1326	X1			5310-205-7981	WASHER: GREASE RETAINING INNER BEARING SUPPORT	82796	A2492C	EA		1					35	4
1327	X1				WASHER: GREASE RETAINING, OUTER BEARING SUPPORT	82796	E2493	EA		1					35	18
1328	X1			5310-285-1591	WASHER: ROTOR SHAFT OUTER SEAL	82796	A2492A	EA		1					35	6
1329	P	0		2920-887-1289	CABLE, IGNITION: SPARK PLUG	66289	YD300-23	EA		2	*	*	*	*	2	4
1330	X2	0			CLAMP, CABLE: SPARK PLUG WIRES	66289	PG559	EA		2	*	*	*	*	2	1
1331		0		5305-013-1238	SCREW, MACHINE: CABLE CLAMP MTG	66289	XA33	EA		2	*	*	*	*	2	3
1332	P	0		2920-841-1890	SPARK PLUG	11583	XMD18	EA		2	2	3	5	10	2	6
1333		0		5310-013-8542	WASHER, LOCK: CABLE CLAMP MTG			EA		1	*	*	*	*	2	2
1334	P	0		5330-599-5356	GASKET: SPARK PLUG	11583	A676	EA		2	*	2	2	3	2	5
1335					GROUP 22 - BODY CHASSIS OR HULL, AND ACCESSORY ITEMS											
1335A					2210 - DATA PLATES											
1336	X2	0			PLATE, INSTRUCTION: ENGINE OPERATING	66289	SD252	EA		1	*	*	*	*		
1337	X2	0			PLATE, INSTRUCTION: MILITARY STANDARD PARTS	66289	SD197B	EA		1	*	*	*	*		
1338	X2	0			PLATE, NAME: MAGNETO	82796	A195	EA		1	*	*	*	*		
1339		0		5305-335-4180	SCREW, DRIVE: NAMEPLATE MTG	79575	5250	EA		2	*	*	*	*		
1340					GROUP 57 - SPRAY EQUIPMENT COMPONENTS											
1340A					5703 - AIR BLOWER ASSEMBLY											
1341	X2	0			ADAPTER: OVERBOARD OIL DRAIN	04255	2300X6	EA		1	*	*	*	*		
1342	X2	0			ELBOW: OVERBOARD OIL DRAIN	04255	3400X6	EA		1	*	*	*	*		
1343	X2	0			FILTER, SILENCER: AIR BLOWER	00736	BW8GS	EA		1	*	*	*	*	32	
1344	X1				BODY, FILTER	00736	BW8GS825	EA		1					32	5
1345	X2	0			ELEMENT, FILTER SILENCER	00736	BW8-826	EA		1	*	*	*	*	32	6
1346	P	0		3740-542-3716	GASKET: ELEMENT TO BODY AND TOP	00736	10M06	EA		2	*	*	*	2	32	4
1347		0		5310-010-3129	NUT, PLAIN, WING: TOP TO BODY	00736	39SYZ20	EA		1	*	*	*	*	32	1
1348	X2	0			TOP ASSEMBLY	00736	BW8-800	EA		1	*	*	*	*	32	8
1349	M	0			FELT: TOP ASSEMBLY MANUFACTURE FROM:	00736	540-16	EA		1					32	7
1349A	P	0		5330-191-1096	FELT SHEET (7 IN BY 7 IN. REQUIRED)			SH			SEE	GRP	9501			
1350		0		5310-366-6294	WASHER, FLAT: TOP TO BODY			EA		1	*	*	*	*	32	3
1351		0		5310-013-8542	WASHER, LOCK: TOP TO BODY			EA							32	2

LINE NO.	(1) SOURCE, MAINT. AND RECOV. CODE (a) SOURCE	(b) MAINT.	(c) RECOV.	(2) FEDERAL STOCK NUMBER	(3) DESCRIPTION	MANUFACTURER'S CODE	MANUFACTURER'S PART NUMBER	(4) UNIT OF ISSUE	(5) QTY INC IN UNIT PACK	(6) QTY INC IN UNIT	(7) 15 DAY ORG. MAINT. ALW. (a) 1-5	(b) 6-20	(c) 21-50	(d) 51-100	(8) ILLUSTRATION (a) FIG. NO.	(b) ITEM OR SYM. NO.
1352					5704 - SPRAY DUCTS AND MANIFOLDS											
1353	X2	O			MANIFOLD SPRAY ASSEMBLY	81336	D13200E5341	EA		1	*	*	*	*		
1354	X2	O			CLAMP, DRUM	81336	C13200E5358	EA		5	*	*	*	*	34	2
1355	X2	O			ELBOW, LONG	81336	B13200E5350	EA		1	*	*	*	*	34	10
1356	X2	O			ELBOW, SHORT	81336	D13200E5353	EA		1	*	*	*	*	34	11
1357	X2	O			END CAP	81336	B13200E5347	EA		2	*	*	*	*	34	1
1358	X2	O			NOZZLE HEAD	81336	C13200E5342	EA		1	*	*	*	*	34	4
1359	X2	O			SCREW, TOGGLE: CLAMP DRUM CLAMPING	81336	A13200E5359	EA		5	*	*	*	*	34	3
1360	X2	O			NOZZLE ASSEMBLY: SPRAY	82254	CFA40961	EA		10	*	*	*	*	34	16
1361	X1				HUB ASSEMBLY	82254	CFA40964	EA		10						
1362	X1				IMPELLER: SPRAY NOZZLE	87373	QW5149	EA		10						
1363	X1				NUT, SELF-LOCKING, HEXAGON: FACE PLATE SCREW, No. 4-40 THD SIZE	82254	CFA40963	EA		20						
1364	X1				PLATE, FACE	87373	QW5155	EA		10						
1365	X1				SCREW, MACHINE: FACE PLATE TO NOZZLE, No. 4-40 THD SIZE, 3/4 IN. LG	82254	CFA40962	EA		20						
1366					5708 - TANKS, VALVES, LINES, HOSES, FITTINGS, AND LIQUID STRAINERS											
1367	X2	O			CLIP, HOSE	82254	CFA40971	EA		2	*	*	*	*		
1368	X2	O			NUT, PLAIN, HEXAGON: CLIP MTG	82254	CFA40974	EA		2	*	*	*	*		
1369	X2	O			SCREW, MACHINE: CLIP MTG, 6-32 x 1/2, RDHD	82254	CFA40972	EA		2	*	*	*	*		
1370		O		5310-595-7235	WASHER, LOCK: CLIP MTG	96906	MS35333-20	EA		2	*	*	*	*		
1371					GROUP 95 - GENERAL USE STANDARDIZED PARTS											
1371A					9501 - BULK MATERIAL											
1372	P	O		5330-191-1096	FELT SHEET			SH			*	*	*	*		

LINE NO.	(1) SOURCE, MAINT. AND RECOV. CODE (a) SOURCE	(b) MAINT.	(c) RECOV.	(2) FEDERAL STOCK NUMBER	(3) DESCRIPTION	MANUFACTURER'S CODE	MANUFACTURER'S PART NUMBER	(4) UNIT OF ISSUE	(5) QTY INC IN UNIT PACK	(6) QTY INC IN UNIT	(7) 15 DAY ORG. MAINT. ALW. (a) 1-5	(b) 6-20	(c) 21-50	(d) 51-100	(8) ILLUSTRATION (a) FIG. NO.	(b) ITEM OR SYM. NO.
1373					PART IV											
1373A					GROUP 01 - ENGINE											
1381					0102 - CRANKSHAFT											
1382	X2	O			SHEAVE, CRANKSHAFT: BLOWER DRIVE	82254	CFR40088	EA		1	*	*	*	*	4	4
1386					0106 - ENGINE LUBRICATION SYSTEM											
1387		O		4730-278-4323	ADAPTER, STRAIGHT, PIPE TO TUBE: TEE TO GOVERNOR OIL LINE	66289	RF269	EA		1	*	*	*	*	10	16
1388		O		5306-543-4308	BOLT, MACHINE: FILTER MTG			EA		4	*	*	*	*	10	22
1389	X2	O			FILTER ASSEMBLY, OIL	73370	F3P	EA		1	*	*	*	*	10	
1390	X1				BODY ASSEMBLY	73370	8134	EA		1					10	20
1391	X2	O			COVER ASSEMBLY	73370	8113	EA		1	*	*	*	*	10	14
1392	X1				COVER, FILTER	73370	102033	EA		1					10	10
1393	X2	O		5330-056-9588	GASKET: FIBER	73370	102032	EA		1	*	*	*	*	10	9
1394	X1				HANDLE ASSEMBLY	73370	8112	EA		1					10	7
1395	X2	O			RING, SNAP	73370	102483	EA		1	*	*	*	*	10	11
1396	X2	O		5310-017-8620	WASHER, SHOULDERED	73370	10776	EA		1	*	*	*	*	10	13
1397	X2	O			SPRING, COMPRESSION	73370	10208	EA		1	*	*	*	*	10	12
1398	P	O		5330-298-0776	WASHER, NONMETALLIC: COVER SCREW	73370	10076	EA		1	*	*	*	2	10	8
1399	P	O		2940-529-2738	FILTER ELEMENT, FLUID, PRESSURE: OIL	73370	6946	EA		1	2	7	13	25	10	23
1400		O		5310-368-1908	NUT, PLAIN, SQUARE: OIL FILTER STRAP	73370	13446	EA		1	*	*	*	*	10	5
1401		O		5305-013-3080	SCREW, MACHINE: OIL FILTER STRAP	73370	12398	EA		1	*	*	*	*	10	21
1402	X2	O			STRAP, BODY	73370	10757	EA		1	*	*	*	*	10	3
1403		O		5310-013-8542	WASHER, LOCK: OIL FILTER STRAP	73370	10124	EA		1	*	*	*	*	10	4
1404	P	O		5330-291-3405	WASHER, NONMETALLIC: COVER	73370	10611	EA		1	2	7	13	25	10	6
1405	P	O		2940-606-6816	HOSE ASSEMBLY, RUBBER: OIL LINE, PRESSURE	66289	RM1299	EA		1	*	*	*	*	10	24
1406	M	O			LINE ASSEMBLY, OIL: CRANKCASE TO GOVERNOR	66289	RM796	EA		1					10	25
					MANUFACTURE FROM:											
1406A		O		4730-011-6452	NUT, TUBE COUPLING	79470	1110X4	EA		2	*	*	*	*		
1407		O		5310-176-8160	NUT, PLAIN, HEXAGON: FILTER MTG			EA		4	*	*	*	*	10	1
1408		O		4730-603-4470	TEE, PIPE: OIL FILTER INLET	66289	RF1301	EA		1	*	*	*	*	10	15
1409	P	O		4710-277-5525	TUBE, COPPER (6 1/2 IN. REQUIRED)			FT			SEE	GRP	9501			
1410		O		5310-596-4911	WASHER, LOCK: FILTER MTG	66289	PE4	EA		4	*	*	*	*	10	2
1411					GROUP 03 - FUEL SYSTEM											
1411A					0309 - FUEL FILTERS											
1412	X2	O		4730-639-9638	STRAINER ASSEMBLY	78480	04480T	EA		1	*	*	*	*		
1413	X1				BAIL ASSEMBLY	78480	07766	EA		1					16	20
1414	P	O		2910-358-4317	BOWL, SEDIMENT, FUEL: GLASS	78480	07759	EA		1	*	*	2	2	16	19
1415	X1			2910-305-5749	COVER, STRAINER	78480	07770	EA		1					16	16
1416	P	O		2910-358-5327	SCREEN, FUEL STRAINER	78480	07762	EA		1	*	*	*	*	16	17

LINE NO.	(1) SOURCE, MAINT. AND RECOV. CODE (a) SOURCE	(b) MAINT.	(c) RECOV.	(2) FEDERAL STOCK NUMBER	(3) DESCRIPTION	MANUFACTURER'S CODE	MANUFACTURER'S PART NUMBER	(4) UNIT OF ISSUE	(5) QTY INC IN UNIT PACK	(6) QTY INC IN UNIT	(7) 15 DAY ORG. MAINT. ALW. (a) 1-5	(b) 6-20	(c) 21-50	(d) 51-100	(8) ILLUSTRATION (a) FIG. NO.	(b) ITEM OR SYM. NO.
1417	X1			2910-368-6657	VALVE, FUEL REGULATING: SHUT OFF	78480	07769	EA		1					16	21
1418	P	0		2910-282-7557	WASHER, NONMETALLIC: BOWL MTG	78480	08227	EA		1	2	2	4	8	16	18
1423					GROUP 06 - ELECTRICAL SYSTEM											
1423A					0605 - IGNITION COMPONENTS											
1424	P	0		2920-566-7806	CABLE, SPECIAL PURPOSE	66289	YD2120	EA		2	*	*	*	*	2	4
1425	X2	0		5340-447-9222	CLAMP, CABLE: SPARK PLUG WIRES	66289	PG314	EA		1	*	*	*	*	2	1
1426	P	0	R	2920-800-8156	MAGNETO ASSEMBLY (INCLUDES COMPONENTS OF REPAIR KIT, STOCK NO. 2920-712-1267)	79575	XHS2484	EA		1	*	*	*	*	22	
1427	X1			2930-353-6609	BEARING, SLEEVE: DRIVE CUP	79575	5518	EA		1					22	4
1428	X1			2920-374-3481	BEARING UNIT, BALL, CYLINDRICAL CARTRIDGE: ROTOR SHAFT	79575	X7672	EA		1						
1429	X1			3110-144-8882	BEARING, BALL ANNULAR: ROTOR	79575	7617	EA		1					22	6
1430	X1			2920-353-6611	RETAINER, BALL BEARING	79575	5567	EA		1					22	5
1431	X1				BRACKET, TERMINAL	79575	X7724	EA		1					22	57
1432	X1			2920-367-7985	CLAMP, ELECTRICAL: COIL CORE	79575	5633	EA		2					22	19
1433	X1			2920-335-4178	COIL, MAGNETO	79575	X7895	EA		1					22	21
1434	X1			4920-428-3751	CORE ASSEMBLY: MAGNETO COIL	79575	X5524	EA		1					22	22
1435	X1			2920-607-1324	COUPLING, MAGNETO: IMPULSE	79575	X8774	EA		1						
1436	X1			2920-366-6269	ARM, TRIP	79575	A179X	EA		1					22	33
1437	X1			2920-368-6715	CUP, MAGNETO DRIVE	79575	2061A	EA		1					22	26
1438	X1			2920-740-2845	FLANGE, DRIVE GROUP	79575	X6586	EA		1					22	35
1439	X1				NUT, IMPULSE LOCK	79575	8739	EA		1					22	28
1440	X1			2920-366-6306	RETAINER, DRIVE SPRING	79575	2288	EA		1					22	31
1441	X1			2920-367-7999	RING, LOCK: RETAINING, IMPULSE COUPLING	79575	6424	EA		1					22	24
1442	X1			2920-662-9135	SPACER, DRIVE FLANGE	79575	2122	EA		1					22	34
1443	X1			5340-353-6606	SPRING, SPIRAL, TENSION: IMPULSE COUPLING	79575	15-186	EA		1					22	27
1444	X1			5340-740-2871	SPRING, TRIP ARM	79575	6585	EA		1					22	32
1445	X1			2920-740-2846	WASHER: DRIVE CUP SPACER	79575	7908	EA		1					22	29
1446	X1			5310-187-3458	WASHER, FLAT: DRIVE FLANGE	79575	M42XA	EA		1					22	30
1447	X1			5310-353-6620	WASHER, THRUST	79575	6425	EA		1					22	25
1448	X1			2920-787-0480	COVER, UNIT	79575	X7910	EA		1					22	16
1449	X1				ROD GROUP, GROUND	79575	X7867	EA		1					22	48
1450	X1			5305-276-7951	SCREW, MACHINE: TERMINAL BLOCK MTG			EA		3					22	13
1451	X1			2920-598-9432	SPRING, HELICAL, COMPRESSION	79575	6732	EA		2					22	50
1452	X1			5940-314-0255	TERMINAL BLOCK: HIGH-TENSION	79575	X7892	EA		1					22	15
1453	X1			5310-013-5830	WASHER, LOCK: TERMINAL BLOCK MTG			EA		3					22	14
1454	X1			8305-740-2859	FELT, STRIP: BREAKER ARM	79575	7644	EA		1					22	58
1455	X1			5330-297-4578	GASKET: IMPULSE STOP	79575	5519	EA		1					22	42
1456	X1			2920-360-8381	GASKET: MAGNETO MTG (COMPONENT OF GASKET SET, STOCK NO. 2805-720-4773, GROUP 0100, PART 1) (CAN BE MANUFACTURED FROM PAPER, STOCK NO. 5330-233-5846)	66289	QD616	EA		1					22	3

LINE NO.	(1) SOURCE, MAINT. AND RECOV. CODE (a) SOURCE	(b) MAINT.	(c) RECOV.	(2) FEDERAL STOCK NUMBER	(3) DESCRIPTION	MANUFACTURER'S CODE	MANUFACTURER'S PART NUMBER	(4) UNIT OF ISSUE	(5) QTY INC IN UNIT PACK	(6) QTY INC IN UNIT	(7) 15 DAY ORG. MAINT. ALW. (a) 1-5	(b) 6-20	(c) 21-50	(d) 51-100	(8) ILLUSTRATION (a) FIG. NO.	(b) ITEM OR SYM NO.
1457	X1				GEAR, DRIVE	79575	6957	EA		1					22	23
1458	X1				HOUSING, MAIN: MAGNETO	79575	X8598	EA		1					22	11
1459	X1				LEAD, ELECTRICAL: BREAKER TO CAPACITOR	79575	X7872	EA		1					22	55
1460	X1			5310-012-0614	NUT, PLAIN, HEXAGON: IMPULSE STOP SETSCREW LOCKING			EA		1					22	38
1461	X1			2510-039-7699	PLATE, IMPULSE STOP	79575	X8555	EA		1					22	37
1462	X1				PLATE, NAME: MAGNETO	79575	8792	EA		1	SEE	GRP 2210				
1463	X1			2920-740-2873	ROTOR	79575	Y7569	EA		1					22	10
1464	X1			5305-281-8308	SCREW, ASSEMBLED WASHER: BREAKER CLAMP, CONTACT MTG, CORE CLAMP MTG	79575	5411	EA		4					22	20
1465	X1			5305-639-6026	SCREW, ASSEMBLED WASHER: TERMINAL BRACKET MTG	79575	5900	EA		1					22	56
1466	X1			5305-335-4180	SCREW, DRIVE: NAMEPLATE MTG	79575	5250	EA		2	SEE	GRP 2210				
1467	X1			5305-424-2999	SCREW, MACHINE: COVER MTG	79575	5622	EA		3					22	18
1468	X1			5305-022-5561	SCREW, MACHINE: IMPULSE STOP CLAMP	79575	6465	EA		4					22	41
1469	X1			5305-638-6834	SETSCREW: IMPULSE STOP			EA		1					22	39
1470	X1			2920-353-6614	SHIELD, BALL BEARING	79575	5926	EA		1					22	8
1471	X1			2920-353-6610	SPACER, SLEEVE: BEARING CAGE	79575	5520	EA		1					22	9
1472	X1			5310-275-1353	WASHER: COVER MTG	79575	1XA256	EA		3					22	17
1473	X1			5310-188-4185	WASHER, FLAT: BREAKER ARM PIVOT	79575	3219	EA		1					22	52
1474	X1			5310-351-0698	WASHER, FLAT: BREAKER POINT ALIGNING	79575	5717	EA		1					22	59
1475	X1				WASHER, FLAT: POINT ALIGNMENT	66289	10407	EA		1					22	51
1476	X1			5310-012-1744	WASHER, LOCK: IMPULSE STOP CLAMP			EA		4					22	40
1477	X1			5330-262-3306	WICK: CAM WIPER, FELT	79575	6984	EA		1					22	54
1478		0		5310-012-0377	NUT, PLAIN, HEXAGON: MAGNETO MTG			EA		1	*	*	*	*	22	44
1479	P	0		2920-712-1267	REPAIR KIT, MAGNETO	81335	79575-4	EA		1	*	2	2	3		
1480	X1			2920-662-9133	BEARING, SLEEVE: BREAKER PLATE	79575	5610	EA		1					22	46
1481	X1			5910-740-2855	CONDENSER, CAP	79575	X7720	EA		1					22	49
1482	X1			2920-740-2882	CONTACT SET, DISTRIBUTOR	79575	X8551	EA		1					22	47
1483	X1			2920-428-3830	DEFLECTOR, DIRT AND OIL	79575	6204	EA		1					22	36
1484	X1			2920-740-2852	GASKET: COVER, LEAD	79575	7871	EA		1					22	12
1485	X1			5315-367-7994	PIN, LOCK: BREAKER ARM	79575	4210	EA		1					22	53
1486	X1			5340-281-6688	RING, RETAINING: ROTARY BEARINGS	79575	5516	EA		1					22	7
1487	X1			2920-353-6618	SEAL, PLAIN: OIL	79575	6199	EA		1					22	43
1488		0		5305-514-9662	SCREW, CAP, HEXAGON HEAD: MAGNETO MTG			EA		2	*	*	*	*	22	1
1489		0		5305-013-1238	SCREW, MACHINE: CABLE CLAMP ATTACHMENT	66289	XA33	EA		1	*	*	*	*	2	3
1490	P	0		2920-293-5212	SPARK PLUG: 18 MM	11583	XED16	EA		2	2	3	5	10	2	6
1491	P	0		5330-599-5356	GASKET: SPARK PLUG	11583	A676	EA		2	*	2	2	3	2	5
1492		0		5310-013-8542	WASHER, LOCK: CABLE CLAMP ATTACHMENT			EA		1	*	*	*	*	2	2
1493		0		5310-582-9930	WASHER, LOCK: MAGNETO MTG	66289	PE76A	EA		2	*	*	*	*	22	2
1494		0		5310-595-7237	WASHER, LOCK: MAGNETO MTG	66289	PE56A	EA		1	*	*	*	*	22	45
1495					GROUP 22 - BODY CHASSIS OR HULL AND ACCESSORY ITEMS											
1495A					2210 - DATA PLATES											
1496	X2	0		2805-685-6019	PLATE, INSTRUCTION: ENGINE OPERATION	66289	SD153	EA		1	*	*	*	*		

LINE NO.	(1) SOURCE, MAINT. AND RECOV. CODE (a) SOURCE	(b) MAINT.	(c) RECOV.	(2) FEDERAL STOCK NUMBER	(3) DESCRIPTION	MANUFACTURER'S CODE	MANUFACTURER'S PART NUMBER	(4) UNIT OF ISSUE	(5) QTY INC IN UNIT PACK	(6) QTY INC IN UNIT	(7) 15 DAY ORG. MAINT. ALW. (a) 1-5	(b) 6-20	(c) 21-50	(d) 51-100	(8) ILLUSTRATION (a) FIG. NO.	(b) ITEM OR SYM. NO.
1497	X2	0			PLATE, INSTRUCTION: MILITARY STANDARD PARTS	66289	SD197A	EA		1	*	*	*	*		
1498	X2	0			PLATE, NAME: MAGNETO	79575	8792	EA		1	*	*	*	*		
1499		0		5305-335-4180	SCREW, DRIVE: NAMEPLATE MTG	79575	5250	EA		2	*	*	*	*		
1500					GROUP 57 - SPRAY EQUIPMENT COMPONENTS											
1500A					5703 - AIR BLOWER ASSEMBLY											
1501	X2	0			FILTER, SILENCER: AIR BLOWER	00736	BW8GS	EA		1	*	*	*	*	32	
1502	X1				BODY, FILTER	00736	BW8GS825	EA		1					32	5
1503	X2	0			ELEMENT, FILTER SILENCER	00736	BW8-826	EA		1	*	*	*	*	32	6
1504	P	0		3740-542-3716	GASKET: ELEMENT TO BODY AND TOP	00736	10M06	EA		2	*	*	*	2	32	4
1505		0		5310-010-3129	NUT, PLAIN, WING: TOP TO BODY	00736	39SYZ20	EA		1	*	*	*	*	32	1
1506	X2	0			TOP ASSEMBLY	00736	BW8-800	EA		1	*	*	*	*	32	8
1507	M	0			FELT: TOP ASSEMBLY MANUFACTURE FROM:	00736	540-16	EA		1					32	7
1507A	P	0		5330-191-1096	FELT SHEET (7 IN. BY 7 IN. REQUIRED)			SH			SEE GRP 9501					
1508		0		5310-366-6294	WASHER, FLAT: TOP TO BODY			EA		1	*	*	*	*	32	3
1509		0		5310-013-8542	WASHER, LOCK: TOP TO BODY	66289	PE80A	EA		1	*	*	*	*	32	2
1510					5704 - SPRAY DUCTS AND MANIFOLDS											
1511	X2	0			MANIFOLD SPRAY ASSEMBLY	81336	D13200E5341	EA		1	*	*	*	*		
1512	X2	0			CLAMP, DRUM	81336	C13200E5358	EA		5	*	*	*	*	34	2
1513	X2	0			ELBOW, LONG	81336	B13200E5350	EA		1	*	*	*	*	34	10
1514	X2	0			ELBOW, SHORT	81336	B13200E5353	EA		1	*	*	*	*	34	11
1515	X2	0			END CAP	81336	B13200E5347	EA		2	*	*	*	*	34	1
1516	X2	0			NOZZLE HEAD	81336	C13200E5342	EA		1	*	*	*	*	34	4
1517	X2	0			SCREW, TOGGLE: CLAMP DRUM CLAMPING	81336	A13200E5359	EA		5	*	*	*	*	34	3
1518	X2	0		3440-977-8672	NOZZLE ASSEMBLY: SPRAY			EA		10	*	*	*	*	34	16
1519					GROUP 76 - FIRE FIGHTING EQUIPMENT COMPONENTS											
1519A					7603 - FIRE EXTINGUISHERS											
1520	X2	0			BRACKET, MOUNTING: EXTINGUISHER	23838	4971Z	EA		1	*	*	*	*		
1521	X2	0			EXTINGUISHER, FIRE	23838	PDC21-2P	EA		1	*	*	*	*		
1522		0		5310-616-6949	NUT, PLAIN, HEXAGON: BRACKET MTG			EA		4	*	*	*	*		
1523		0		5305-010-0959	SCREW, MACHINE: BRACKET MTG			EA		4	*	*	*	*		
1524	X2	0			WASHER, LOCK: BRACKET MTG	96906	MS35333-21	EA		8	*	*	*	*		
1525					GROUP 95 - GENERAL USE STANDARDIZED PARTS											
1525A					9501 - BULK MATERIAL											
1526	P	0		5330-191-1096	FELT SHEET			SH			*	*	*	*		

LINE NO.	(1) SOURCE, MAINT. AND RECOV. CODE (a) SOURCE	(b) MAINT.	(c) RECOV.	(2) FEDERAL STOCK NUMBER	(3) DESCRIPTION	MANUFACTURER'S CODE	MANUFACTURER'S PART NUMBER	(4) UNIT OF ISSUE	(5) QTY INC IN UNIT PACK	(6) QTY INC IN UNIT	(7) 15 DAY ORC. MAINT. ALW (a) 1-5	(b) 6-20	(c) 21-50	(d) 51-100	(8) ILLUSTRATION (a) FIG. NO.	(b) ITEM OR SYM. NO.
1527					PART V											
1527A					GROUP 01 - ENGINE											
1527B					0100 - ENGINE ASSEMBLY											
1535	X2	0			EXTENSION, OIL DRAIN	82254	CFR40975	EA		1	*	*	*	*		
1536					0102 - CRANKSHAFT											
1537	X2	0			SHEAVE, CRANKSHAFT: BLOWER DRIVE	71176	3T660	EA		1	*	*	*	*	4	4
1540					0106 - ENGINE LUBRICATION SYSTEM											
1541		0		4730-278-4323	ADAPTER, STRAIGHT, PIPE TO TUBE: TEE TO GOVERNOR OIL LINE	66289	RF269	EA		1	*	*	*	*	10	16
1542		0		5306-543-4308	BOLT, MACHINE: FILTER MTG			EA		4	*	*	*	*	10	22
1543	X2	0		2940-358-2536	FILTER, FLUID, PRESSURE	66289	RV28	EA		1	*	*	*	*	10	
1544	X1				BODY, ASSEMBLY	73370	5310	EA		1					10	20
1545	X2	0		2940-393-5988	COVER ASSEMBLY	73370	5241	EA		1	*	*	*	*	10	14
1546	X1				COVER, FILTER	73370	102033	EA		1					10	10
1547	X2	0		5330-056-9588	GASKET: FIBER	73370	102032	EA		1	*	*	*	*	10	9
1548	X1				HANDLE ASSEMBLY	73370	8112	EA		1					10	7
1549	X2	0			RING, SNAP	73370	102483	EA		1	*	*	*	*	10	11
1550	X2	0		5310-417-8620	WASHER, SHOULDERED, HELICAL SPRING	73370	10776	EA		1	*	*	*	*	10	13
1551	X2	0			SPRING, COMPRESSION	73370	10208	EA		1	*	*	*	*	10	12
1552	P	0		5330-298-0776	WASHER, NONMETALLIC: COVER SCREW	73370	10076	EA		1	*	*	*	2	10	8
1553	P	0		2940-141-9025	FILTER ELEMENT	73370	C21P2	EA		1	2	7	13	25	10	23
1554	P	0		5330-599-1285	GASKET, COVER WASHER, NONMETALLIC	73370	11582	EA		1	2	7	13	25	10	6
1555		0		5310-368-1908	NUT, PLAIN, SQUARE: OIL FILTER STRAP	73370	13446	EA		1	*	*	*	*	10	5
1556		0		5305-013-3083	SCREW, MACHINE: OIL FILTER STRAP	73370	12398	EA		1	*	*	*	*	10	21
1557	X2	0		2940-732-4214	STRAP: OIL FILTER MTG	73370	11563	EA		1	*	*	*	*	10	3
1558		0		5310-013-8542	WASHER, LOCK: OIL FILTER STRAP	73370	10124	EA		1	*	*	*	*	10	4
1559		0		5310-176-8160	NUT, PLAIN, HEXAGON: FILTER MTG			EA		4	*	*	*	*	10	1
1560		0		4730-603-4470	TEE, PIPE: OIL FILTER INLET	66289	RF1301	EA		1	*	*	*	*	10	15
1561	X2	0		2940-542-3807	TUBE ASSEMBLY, OIL	66289	RM1319G	EA		1	*	*	*	*	10	25
1562		0		5310-596-4911	WASHER, LOCK: FILTER MTG	66289	PE4	EA		4	*	*	*	*	10	2
					GROUP 03 - FUEL SYSTEM											
1563					0306 - TANKS, LINES, FITTINGS											
1564	X2	0			CLIP, FUEL LINE	82254	CFA40970	EA		1	*	*	*	*		
1565	X2	0			NUT: CLIP SCREW	82254	CFA40974	EA		1	*	*	*	*		
1566	X2	0			SCREW: CLIP MTG	82254	CFA40972	EA		1	*	*	*	*		
1567		0		5310-595-7235	WASHER, LOCK: CLIP MTG	96906	MS35333-20	EA		1	*	*	*	*		

LINE NO.	(1) SOURCE, MAINT. AND RECOV. CODE (a) SOURCE	(b) MAINT.	(c) RECOV.	(2) FEDERAL STOCK NUMBER	(3) DESCRIPTION	MANUFACTURER'S CODE	MANUFACTURER'S PART NUMBER	(4) UNIT OF ISSUE	(5) QTY INC IN UNIT PACK	(6) QTY INC IN UNIT	(7) 15 DAY ORG. MAINT. ALW. (a) 1-5	(b) 6-20	(c) 21-50	(d) 51-100	(8) ILLUSTRATION (a) FIG. NO.	(b) ITEM OR SYM. NO.
1568					0309 - FUEL FILTERS											
1569	X2	O		4730-639-9638	STRAINER ASSEMBLY	66289	LP43	EA		1	*	*	*	*		
1570	X1			2910-382-8768	BAIL ASSEMBLY	78489	0J447	EA		1					16	20
1571	P	O		2910-354-3834	BOWL, SEDIMENT: GLASS	78480	05137	EA		1	*	*	2	2	16	19
1572	X1			2910-305-5749	COVER, STRAINER	78480	07770	EA		1					16	16
1573	P	O		2910-142-2738	STRAINER ELEMENT, SEDIMENT	78470	0J352	EA		1	*	*	*	*	16	17
1574	X1			2910-368-6657	VALVE, FUEL REGULATING: SHUT OFF	78480	07769	EA		1					16	21
1575	P	O		5330-187-2962	WASHER, NONMETALLIC	78480	06696	EA		1	2	2	4	8	16	18
					GROUP 04 - EXHAUST SYSTEM											
1576					0401 - MUFFLER AND PIPES											
1577	X2	O			GUARD, MUFFLER	82279	CFRH0870	EA		1	*	*	*	*		
1578		O		5310-584-5005	NUT, PLAIN, HEXAGON: MUFFLER GUARD TO CANOPY	96906	MS35690-405	EA		4	*	*	*	*		
1579		O		5305-637-4028	SCREW, CAP, HEXAGON HEAD: MUFFLER GUARD TO CANOPY	96906	MS35291-3	EA		4	*	*	*	*		
1580		O		5310-011-5544	WASHER, LOCK: MUFFLER GUARD TO CANOPY	96906	MS35333-40	EA		8	*	*	*	*		
1585					GROUP 06 - ELECTRICAL SYSTEM											
1585A					0605 - IGNITION COMPONENTS											
1586	P	O	R	2920-979-3504	MAGNETO (INCLUDES COMPONENTS OF REPAIR KIT, STOCK NO. 2920-844-2035)	66289	Y93DS1	EA		1	*	*	*	*		
1592	X2	O			PLATE, NAME: MAGNETO	82796	A195	EA		1	SEE GRP 2210					
1628	X2	O		2990-603-4773	GEAR, HELICAL: DRIVE	66289	GD93C3	EA		1	*	*	*	*	36	4
1629		O		5310-012-0377	NUT, PLAIN, HEXAGON: MAGNETO MTG			EA		1					36	24
1630		O		5315-011-2726	PIN, COTTER: DRIVE GEAR			EA		1	*	*	*	*	36	23
1631		O		5305-514-9662	SCREW, CAP, HEXAGON HEAD: MAGNETO MTG			EA		2	*	*	*	*	36	1
1632		O		5310-582-9930	WASHER, LOCK: MAGNETO MTG	66289	PE76A	EA		2	*	*	*	*	36	2
1633		O		5310-595-7237	WASHER, LOCK: MAGNETO MTG	66289	PE56A	EA		1	*	*	*	*	36	22
1634	P	O		2920-844-2035	REPAIR KIT, MAGNETO	82796	SK72	EA		1	*	2	2	3		
1635	X1			2920-142-1888	ARM, CONTACT SET, DISTRIBUTOR	82796	Q2437A	EA		1					36	20
1636	X1			5340-675-5253	CLIP, RETAINING	82796	C1498G	EA		1					36	9
1637	X1			5340-598-3180	CLIP, RETAINING: ROTOR DRIVE SHAFT	82796	B1498D	EA		1					35	3
1638	X1				CONDENSER	82796	QX2433	EA		1					36	16
1639	X1			2920-217-3489	GASKET: END CAP	82796	N2498	EA		1					36	5
1640	X1			5305-281-6387	SCREW, CAP END	82796	N10S10D	EA		4					36	8
1641	X1				SEAL, CONDENSER	82796	P2473	EA		1					36	15
1642	X1			2920-356-1221	SEAL: ROTOR SHAFT	82796	G3861	EA		1					35	5
1643	X1				SPACER, GROUND SWITCH	82796	F4373	EA		1					36	10
1644	X1			5310-794-8555	WASHER, FLAT: RETAINING DRIVE END BEARING	82796	A2492D	EA		1					35	14

LINE NO.	(1) SOURCE, MAINT. AND RECOV. CODE (a) SOURCE	(b) MAINT.	(c) RECOV.	(2) FEDERAL STOCK NUMBER	(3) DESCRIPTION	MANUFACTURER'S CODE	MANUFACTURER'S PART NUMBER	(4) UNIT OF ISSUE	(5) QTY INC IN UNIT PACK	(6) QTY INC IN UNIT	(7) 15 DAY ORG. MAINT. ALW. (a) 1-5	(b) 6-20	(c) 21-50	(d) 51-100	(8) ILLUSTRATION (a) FIG. NO.	(b) ITEM OR SYM. NO.
1645	X1			5310-205-7981	WASHER, FLAT: ROTOR SHAFT INNER SEAL	82796	A2492C	EA		1					35	4
1646	X1			5310-205-7981	WASHER: GREASE RETAINING INNER BEARING SUPPORT	82796	A2492C	EA		1					35	4
1647	X1				WASHER: GREASE RETAINING, OUTER BEARING SUPPORT	82796	E2493	EA		1					35	18
1648	X1			5310-285-1591	WASHER: ROTOR SHAFT OUTER SEAL	82796	A2492A	EA		1					35	6
1649	P	0		2920-887-1289	CABLE, IGNITION: SPARK PLUG	66289	YD30023	EA		2	*	*	*	*	2	4
1650	X2	0			CLAMP, CABLE: SPARK PLUG WIRES	66289	PG559	EA		2	*	*	*	*	2	1
1651		0		5305-013-1238	SCREW, MACHINE: CABLE CLAMP MTG	66289	XA33	EA		2	*	*	*	*	2	3
1652	P	0		2920-841-1890	SPARK PLUG	11583	XMD18	EA		2	2	3	5	10	2	6
1653		0		5310-013-8542	WASHER, LOCK: CABLE CLAMP MTG			EA		1	*	*	*	*	2	2
1654	P	0		5330-599-5356	GASKET: SPARK PLUG	11583	A676	EA		2	*	2	2	3	2	5
1655					GROUP 22 - BODY CHASSIS OR HULL AND ACCESSORY ITEMS											
1655A					2210 - DATA PLATES											
1656	X2	0			PLATE, INSTRUCTION: ENGINE OPERATION	66289	SD252	EA		1	*	*	*	*		
1657	X2	0			PLATE, INSTRUCTION: MILITARY STANDARD PARTS	66289	SD197B	EA		1	*	*	*	*		
1658	X2	0			PLATE, NAME: MAGNETO	82976	A195	EA		1	*	*	*	*		
1659		0		5305-335-4180	SCREW, DRIVE: NAMEPLATE MTG	79575	5250	EA		2	*	*	*	*		
1660					GROUP 57 - SPRAY EQUIPMENT COMPONENTS											
1660A					5703 - AIR BLOWER ASSEMBLY											
1661	X2	0			ADAPTER: OVERBOARD OIL DRAIN	04255	3200X6	EA		1	*	*	*	*		
1662		0		4730-230-1924	ELBOW: OVERBOARD OIL DRAIN	04255	3400X6	EA		1	*	*	*	*		
1663	X2	0			FILTER, SILENCER: AIR BLOWER	82254	CFN40566	EA		1	*	*	*	*	37	
1664	X1				BODY, FILTER	82254	CFN40998	EA		1					37	1
1665	X2	0			BOLT, MACHINE: TOP	82254	G427585	EA		1	*	*	*	*	37	5
1666	X2	0			ELEMENT, FILTER STRAINER	00736	BW8-826	EA		1	*	*	*	*	37	2
1667	X2	0			TOP ASSEMBLY	00736	BW8-800	EA		1	*	*	*	*	37	3
1668		0		5310-227-6566	WASHER, FLAT: TOP			EA		1	*	*	*	*	37	4
1669					5704 - SPRAY DUCTS AND MANIFOLDS											
1670	X2	0			MANIFOLD SPRAY ASSEMBLY	81336	D13200E5341	EA		1	*	*	*	*		
1671	X2	0			CLAMP, DRUM	81336	C13200E5358	EA		5	*	*	*	*	34	2
1672	X2	0			ELBOW, LONG	81336	D13200E5350	EA		1	*	*	*	*	34	10
1673	X2	0			ELBOW, SHORT	81336	D13200E5353	EA		1	*	*	*	*	34	11
1674	X2	0			END CAP	81336	B13200E5347	EA		2	*	*	*	*	34	1
1675	X2	0			NOZZLE HEAD	81336	C13200E5342	EA		1	*	*	*	*	34	4
1676	X2	0			SCREW, TOGGLE: CLAMP DRUM CLAMPING	81336	A13200E5359	EA		5	*	*	*	*	34	3

LINE NO.	(1) SOURCE, MAINT. AND RECOV. CODE (a) SOURCE	(b) MAINT.	(c) RECOV.	(2) FEDERAL STOCK NUMBER	(3) DESCRIPTION	MANUFACTURER'S CODE	MANUFACTURER'S PART NUMBER	(4) UNIT OF ISSUE	(5) QTY INC IN UNIT PACK	(6) QTY INC IN UNIT	(7) 15 DAY ORG. MAINT. ALW. (a) 1-5	(b) 6-20	(c) 21-50	(d) 51-100	(8) ILLUSTRATION (a) FIG. NO.	(b) ITEM OR SYM. NO.
1677	X2	0			NOZZLE ASSEMBLY: SPRAY	82254	CFA40961	EA		10	*	*	*	*	34	16
1678	X1				HUB ASSEMBLY	82254	CFA40964	EA		10						
1679	X1				IMPELLER: SPRAY NOZZLE	87373	ZW5139	EA		10						
1680	X1				NUT, SELF-LOCKING, HEXAGON: FACE PLATE SCREW	82254	CFA40963	EA		20						
1681	X1				PLATE, FACE	87373	ZW5155	EA		10						
1682	X1				SCREW, MACHINE: FACE PLATE TO NOZZLE, No. 4-40 THD SIZE, 3/4 IN. LG	82254	CFA40962	EA		20						
1683					5708 - TANKS, VALVES, LINES HOSES; FITTINGS AND LIQUID STRAINERS											
1684	X2	0			CLIP, HOSE	82254	CFA40971	EA		2	*	*	*	*		
1685	X2	0			NUT, PLAIN, HEXAGON: CLIP MTG	82254	CFA40974	EA		2	*	*	*	*		
1686	X2	0			SCREW, MACHINE: CLIP MTG, 6-32 x 1/2, RDHD	82254	CFA40972	EA		2	*	*	*	*		
1687		0		5310-595-7235	WASHER, LOCK: CLIP MTG	96906	MS35333-20	EA		2	*	*	*	*		

LINE NO.	(1) SOURCE, MAINT. AND RECOV. CODE (a) SOURCE	(b) MAINT.	(c) RECOV.	(2) FEDERAL STOCK NUMBER	(3) DESCRIPTION	MANUFACTURER'S CODE	MANUFACTURER'S PART NUMBER	(4) UNIT OF ISSUE	(5) QTY INC IN UNIT PACK	(6) QTY INC IN UNIT	(7) 15 DAY ORG. MAINT. ALW. (a) 1-5	(b) 6-20	(c) 21-50	(d) 51-100	(8) ILLUSTRATION (a) FIG. NO.	(b) ITEM OR SYM. NO.
1688					PART VI											
1688A					GROUP 01 - ENGINE											
1692					0101 - CRANKCASE, BLOCK, CYLINDER HEAD											
1696	X2	0			EXTENSION, OIL DRAIN	82254	CFR80975	EA		1	*	*	*	*		
1697					0102 - CRANKSHAFT											
1698	X2	0			SHEAVE, CRANKSHAFT: BLOWER DRIVE	71176	3T660	EA		1	*	*	*	*	4	4
1701					0106 - ENGINE LUBRICATION SYSTEM											
1702		0		4730-278-4323	ADAPTER, STRAIGHT, PIPE TO TUBE: TEE TO GOVERNOR OIL LINE	66289	RF269	EA		1	*	*	*	*	10	16
1703		0		5306-543-4308	BOLT, MACHINE: FILTER MTG			EA		4	*	*	*	*	10	22
1704	X2	0		2940-358-2536	FILTER, FLUID, PRESSURE	66289	RV28	EA		1	*	*	*	*	10	
1705	X1				BODY, ASSEMBLY	73370	5310	EA		1					10	20
1706	X2	0		2940-393-5988	COVER ASSEMBLY	73370	5241	EA		1	*	*	*	*	10	14
1707	X1				COVER, FILTER	73370	102033	EA		1					10	10
1708	X2	0		5330-056-9588	GASKET: FIBER	73370	102032	EA		1	*	*	*	*	10	9
1709	X1				HANDLE ASSEMBLY	73310	8112	EA		1					10	7
1710	X2	0			RING, SNAP	73370	102483	EA		1	*	*	*	*	10	11
1711	X2	0		5310-417-8620	WASHER, SHOULDERED	73370	10776	EA		1	*	*	*	*	10	13
1712	X2	0			SPRING, COMPRESSION	73370	10208	EA		1	*	*	*	*	10	12
1713	P	0		5330-298-0776	WASHER, NONMETALLIC: COVER SCREW	73370	10076	EA		1	*	*	*	2	10	8
1714	P	0		2940-141-9025	FILTER ELEMENT	73370	C21P2	EA		1	2	7	13	25	10	23
1715	P	0		5330-599-1285	GASKET, COVER WASHER, NONMETALLIC	73370	11582	EA		1	2	7	13	25	10	6
1716		0		5310-368-1908	NUT, PLAIN, SQUARE: OIL FILTER STRAP	73370	13446	EA		1	*	*	*	*	10	5
1717		0		5305-013-3083	SCREW, MACHINE: OIL FILTER STRAP	73370	12398	EA		1	*	*	*	*	10	21
1718	X2	0		2940-732-4214	STRAP: OIL FILTER MTG	73370	11563	EA		1	*	*	*	*	10	3
1719		0		5310-013-8542	WASHER, LOCK: OIL FILTER STRAP	73370	10124	EA		1	*	*	*	*	10	4
1720		0		5310-176-8160	NUT, PLAIN, HEXAGON: FILTER MTG			EA		4	*	*	*	*	10	1
1721		0		4730-603-4470	TEE, PIPE: OIL FILTER INLET	66289	RF1301	EA		1	*	*	*	*	10	15
1722	X2	0		2940-542-3807	TUBE ASSEMBLY, OIL	66289	RM1319G	EA		1	*	*	*	*	10	25
1723		0		5310-596-4911	WASHER, LOCK: FILTER MTG	66289	PE4	EA		4	*	*	*	*	10	2
1723A					GROUP 03 - FUEL SYSTEM											
1724					0309 - FUEL FILTERS											
1725	X2	0		4730-639-9638	STRAINER ASSEMBLY	66289	LP43	EA		1	*	*	*	*		
1726	X1			2910-382-8768	BAIL ASSEMBLY	78480	04447	EA		1					16	20
1727	P	0		2910-354-3834	BOWL, SEDIMENT: GLASS	78480	06137	EA		1	*	*	2	2	16	19
1728	X1			2910-305-5749	COVER, STRAINER	78480	07770	EA		1					16	16
1729	P	0		2910-142-2738	STRAINER ELEMENT, SEDIMENT	78480	04352	EA		1	*	*	*	*	16	17
1730	X1			2910-368-6657	VALVE, FUEL REGULATING: SHUT OFF	78480	07769	EA		1					16	21
1731	P	0		5330-187-2962	WASHER, NONMETALLIC: BOWL MTG	78480	05096	EA		1	2	2	4	8	16	18

LINE NO.	(1) SOURCE, MAINT. AND RECOV. CODE (a) SOURCE	(b) MAINT.	(c) RECOV.	(2) FEDERAL STOCK NUMBER	(3) DESCRIPTION	MANUFACTURER'S CODE	MANUFACTURER'S PART NUMBER	(4) UNIT OF ISSUE	(5) QTY INC IN UNIT PACK	(6) QTY INC IN UNIT	(7) 15 DAY ORG. MAINT. ALW. (a) 1-5	(b) 6-20	(c) 21-50	(d) 51-100	(8) ILLUSTRATION (a) FIG. NO.	(b) ITEM OR SYM. NO.
1736					GROUP 06 - ELECTRICAL SYSTEM											
1736A					0603 - IGNITION COMPONENTS											
1737	P	O	R	2920-979-3504	MAGNETO (INCLUDES COMPONENTS OF REPAIR KIT, STOCK NO. 2920-844-2035)	66289	Y93DS1	EA		1	*	*	*	*		
1743	X2	O			PLATE, NAME: MAGNETO	82796	A195	EA		1	SEE GRP 2210				36	3
1778	X1			2920-360-8381	GASKET: MAGNETO MTG (COMPONENT OF GASKET SET, STOCK NO. 2805-730-4773, SEE GROUP 0100, PART I) (CAN BE MANUFACTURED FROM PAPER, STOCK NO. 5330-233-5846)	66289	GD616	EA		1						
1779	X2	O		2990-603-4773	GEAR, HELICAL: DRIVE	66289	GD93C3	EA		1	*	*	*	*	36	4
1780		O		5310-012-0377	NUT, PLAIN, HEXAGON: MAGNETO MTG			EA		1					36	24
1781		O		5315-011-2726	PIN, COTTER: DRIVE GEAR			EA		1	*	*	*	*	36	23
1782		O		5305-514-9662	SCREW, CAP, HEXAGON HEAD: MAGNETO MTG			EA		2	*	*	*	*	36	1
1783		O		5310-582-9930	WASHER, LOCK: MAGNETO MTG	66289	PE76A	EA		2	*	*	*	*	36	2
1784		O		5310-595-7237	WASHER, LOCK: MAGNETO MTG	66289	PE56A	EA		1	*	*	*	*	36	22
1785	P	O		2920-844-2035	REPAIR KIT, MAGNETO	82796	SK72	EA		1	*	2	2	3		
1786	X1			2920-142-1000	ARM, CONTACT SET, DISTRIBUTOR	82796	Q2437A	EA		1					36	20
1787	X1			5340-598-3180	CLIP, RETAINING: ROTOR DRIVE SHAFT	82796	B1498B	EA		1					35	3
1788	X1			5340-675-5253	CLIP, RETAINING: SWITCH	82796	C1498G	EA		1					36	9
1789	X1				CONDENSER	82796	QX2433	EA		1					36	16
1790	X1			2910-217-3489	GASKET: END CAP	82796	N2498	EA		1					36	5
1791	X1			5305-281-6387	SCREW, CAP END	82796	10S10D	EA		4					36	8
1792	X1				SEAL, CONDENSER	82796	P2473	EA		1					36	15
1793	X1			2920-356-1021	SEAL: ROTOR SHAFT	82796	C3861	EA		1					35	5
1794	X1				SPACER, GROUND SWITCH	82796	F4373	EA		1					36	10
1795	X1			5310-794-8555	WASHER, FLAT: RETAINING DRIVE END BEARING	82796	A2492C	EA		1					35	14
1796	X1			5310-205-7981	WASHER, FLAT: ROTOR SHAFT INNER SEAL	82796	A2492C	EA		1					35	4
1797	X1			5310-205-7981	WASHER: GREASE RETAINING INNER BEARING SUPPORT	82796	A2492C	EA		1					35	4
1798	X1				WASHER: GREASE RETAINING, OUTER BEARING SUPPORT	82796	E2493	EA		1					35	18
1799	X1			5310-285-1591	WASHER: ROTOR SHAFT OUTER SEAL	82796	A2492A	EA		1					35	6
1800	P	O		2920-887-1209	CABLE, IGNITION: SPARK PLUG	66289	YD300-23	EA		2	*	*	*	*	2	4
1801	X2	O			CLAMP, CABLE: SPARK PLUG WIRES	66289	PG559	EA		2	*	*	*	*	2	1
1802		O		5305-013-1830	SCREW, MACHINE: CABLE CLAMP MTG	66289	XA33	EA		2	*	*	*	*	2	3
1803	P	O		2920-841-1890	SPARK PLUG	11583	XMD18	EA		2	2	3	5	10	2	6
1804		O		5310-013-8542	WASHER, LOCK: CABLE CLAMP MTG			EA		1	*	*	*	*	2	2
1805	P	O		5330-509-5356	GASKET: SPARK PLUG	11583	A676	EA		2	*	2	2	3	2	5

LINE NO.	(1) SOURCE, MAINT. AND RECOV. CODE (a) SOURCE	(b) MAINT.	(c) RECOV.	(2) FEDERAL STOCK NUMBER	(3) DESCRIPTION	MANUFACTURER'S CODE	MANUFACTURER'S PART NUMBER	(4) UNIT OF ISSUE	(5) QTY INC IN UNIT PACK	(6) QTY INC IN UNIT	(7) 15 DAY ORG. MAINT. ALW. (a) 1-5	(b) 6-20	(c) 21-50	(d) 51-100	(8) ILLUSTRATION (a) FIG. NO.	(b) ITEM OR SYM. NO.
1806					GROUP 22 - BODY CHASSIS OR HULL AND ACCESSORY ITEMS											
1806A					2210 - DATA PLATES											
1807	X2	0			PLATE, INSTRUCTION: ENGINE OPERATION	66289	SD252	EA		1	*	*	*	*		
1808	X2	0			PLATE, INSTRUCTION: MILITARY STANDARD PARTS	66289	SD197B	EA		1	*	*	*	*		
1809	X2	0			PLATE, NAME: MAGNETO	82697	A195	EA		1	*	*	*	*		
1810		0		5305-335-4180	SCREW, DRIVE: NAMEPLATE MTG	79575	5250	EA		2	*	*	*	*		
1811					GROUP 57 - SPRAY EQUIPMENT COMPONENTS											
1811A					5703 - AIR BLOWER ASSEMBLY											
1812	X2	0			ADAPTER: OVERBOARD OIL DRAIN	04255	3200X6	EA		1	*	*	*	*		
1813	X2	0			ELBOW: OVERBOARD OIL DRAIN	04255	3400X6	EA		1	*	*	*	*		
1814	X2	0			FILTER, SILENCER: AIR BLOWER	82254	CFN40566	EA		1	*	*	*	*	37	
1815	X1				BODY, FILTER	82254	CFN40998	EA		1					37	1
1816	X2	0			BOLT, MACHINE: TOP	82254	G427585	EA		1	*	*	*	*	37	5
1817	X2	0			ELEMENT, FILTER STRAINER	00736	BWB826	EA		1	*	*	*	*	37	2
1818	X2	0			TOP ASSEMBLY	00736	BW8-800	EA		1	*	*	*	*	37	3
1819		0		5310-227-6566	WASHER, FLAT: TOP			EA		1	*	*	*	*	37	4
1820					5704 - SPRAY DUCTS AND MANIFOLDS											
1821	X2	0			NOZZLE ASSEMBLY: SPRAY	82254	CFA40961	EA		10	*	*	*	*	34	16
1822	X1				HUB, ASSEMBLY	82254	CFA40964	EA		10						
1823	X1				IMPELLER: SPRAY NOZZLE	87373	ZW5139	EA		10						
1824	X1				NUT, SELF-LOCKING, HEXAGON: FACE PLATE SCREW	82254	CFA40963	EA		20						
1825	X1				PLATE, FACE	87373	ZW5155	EA		10						
1826	X1				SCREW, MACHINE: FACE PLATE TO NOZZLE, No. 4-40 THD SIZE, 3/8 IN. LG	82254	CFA40962	EA		20						
1827	X2	0			CLAMP ASSEMBLY: NOZZLE ASSEMBLY	82254	CFB55020	EA		3	*	*	*	*		
1828	X2	0			NOZZLE HEAD ASSEMBLY: SPRAY	82254	CFR41536	EA		1	*	*	*	*	38	
1829	X2	0			BODY: NOZZLE HEAD	82254	CFR41535-1	EA		1	*	*	*	*	38	1
1830	X2	0			COVER: NOZZLE HEAD	82254	CFR41535-5	EA		2	*	*	*	*	38	4
1831	P	0		5330-956-4307	GASKET, LONG: COVER MTG	82254	CFA41537	EA		4	*	*	2	2	38	2
1832	P	0		5330-925-0455	GASKET, SHORT: COVER MTG	82254	CFA41538	EA		4	*	*	2	2	38	3
1833	X2	0			SCREW, MACHINE: COVER MTG, 1/4-28 THD SIZE, 1/2 IN. LG	82254	CFA41100	EA		28	*	*	*	*	38	6
1834	X2	0			WASHER, LOCK: COVER MTG, 1/4 I.T.	96906	MS35333-25	EA		28	*	*	*	*	38	5

LINE NO.	(1) SOURCE, MAINT. AND RECOV. CODE (a) SOURCE	(b) MAINT.	(c) RECOV.	(2) FEDERAL STOCK NUMBER	(3) DESCRIPTION	MANUFACTURER'S CODE	MANUFACTURER'S PART NUMBER	(4) UNIT OF ISSUE	(5) QTY INC IN UNIT PACK	(6) QTY INC IN UNIT	(7) 15 DAY ORG. MAINT. ALW. (a) 1-5	(b) 6-20	(c) 21-50	(d) 51-100	(8) ILLUSTRATION (a) FIG. NO.	(b) ITEM OR SYM. NO.
1835					GROUP 76 - FIRE FIGHTING EQUIPMENT COMPONENTS											
1835A					7603 - FIRE EXTINGUISHERS											
1836	X2	0			BRACKET, MOUNTING: FIRE EXTINGUISHER	23838	4971	EA		1	*	*	*	*		
1837	X2	0			EXTINGUISHER, FIRE	23838	23A9S	EA		1	*	*	*	*		
1838	X2	0			NUT, PLAIN, HEXAGON: BRACKET MTG, 1/4-20 THD SIZE	96906	MS35690-405	EA		2	*	*	*	*		
1839	X2	0			SCREW, MACHINE: BRACKET MTG, 1/4-20 x 1/2	96906	MS35291-4	EA		2	*	*	*	*		
1840	X2	0			WASHER, LOCK: BRACKET MTG, 1/4 IN. SCREW SIZE	96906	MS35333-23	EA		2	*	*	*	*		

LINE NO.	(1) SOURCE, MAINT. AND RECOV. CODE (a) SOURCE	(b) MAINT.	(c) RECOV.	(2) FEDERAL STOCK NUMBER	(3) DESCRIPTION	MANUFACTURER'S CODE	MANUFACTURER'S PART NUMBER	(4) UNIT OF ISSUE	(5) QTY INC IN UNIT PACK	(6) QTY INC IN UNIT	(7) 15 DAY ORG. MAINT. ALW. (a) 1-5	(b) 6-20	(c) 21-50	(d) 51-100	(8) ILLUSTRATION (a) FIG. NO.	(b) ITEM OR SYM. NO.
1841					PART VII											
1841A					GROUP 01 - ENGINE											
1845					0101 - CRANKCASE, BLOCK, CYLINDER HEAD											
1849	X2	O			EXTENSION, OIL DRAIN	82254	CF440974	EA		1	*	*	*	*		
1850					0102 - CRANKSHAFT											
1851	X2	O			SHEAVE, CRANKSHAFT: BLOWER DRIVE	71176	3TB60	EA		1	*	*	*	*	4	4
1854					0106 - ENGINE LUBRICATION SYSTEM											
1855		O		4730-278-4323	ADAPTER, STRAIGHT, PIPE TO TUBE: TEE TO GOVERNOR OIL LINE	66289	RF269	EA		1	*	*	*	*	10	16
1856		O		5306-543-4308	BOLT, MACHINE: FILTER MTG			EA		4	*	*	*	*	10	22
1857	X2	O		2940-358-2436	FILTER, FLUID, PRESSURE	66289	[illegible]28	EA		1	*	*	*	*	10	
1858	X1			2940-358-2536	BODY, ASSEMBLY	73370	55.0	EA		1					10	20
1859	X2	O		2940-393-5988	COVER ASSEMBLY	73370	5241	EA		1	*	*	*	*	10	14
1860	X1				COVER, FILTER	73370	102033	EA		1					10	10
1861	X2	O		5330-056-9588	GASKET: FIBER	73370	102032	EA		1	*	*	*	*	10	9
1862	X1				HANDLE ASSEMBLY	73370	8112	EA		1					10	7
1863	X2	O			RING, SNAP	73370	102483	EA		1	*	*	*	*	10	11
1864	X2	O		5310-417-8620	WASHER, SHOULDERED	73370	10776	EA		1	*	*	*	*	10	13
1865	X2	O			SPRING, COMPRESSION	73370	10208	EA		1	*	*	*	*	10	12
1866	P	O		5330-298-0776	WASHER, NONMETALLIC: COVER SCREW	73370	10076	EA		1	*	*	*	2	10	8
1867	P	O		2940-141-9025	FILTER ELEMENT	73370	C21P2	EA		1	2	7	13	25	10	23
1868	P	O		5330-599-1285	GASKET, COVER WASHER, NONMETALLIC	73370	11582	EA		1	2	7	13	25	10	6
1869		O		5310-368-1908	NUT, PLAIN, SQUARE: OIL FILTER STRAP	73370	13446	EA		1	*	*	*	*	10	5
1870		O		5305-013-3083	SCREW, MACHINE: OIL FILTER STRAP	73370	12398	EA		1	*	*	*	*	10	21
1871	X2	O		2940-732-4214	STRAP: OIL FILTER MTG	73370	11563	EA		1	*	*	*	*	10	3
1872		O		5310-013-8542	WASHER, LOCK: OIL FILTER STRAP	73370	10124	EA		1	*	*	*	*	10	4
1873		O		5310-176-8160	NUT, PLAIN, HEXAGON: FILTER MTG			EA		4	*	*	*	*	10	1
1874		O		4730-603-4470	TEE, PIPE: OIL FILTER INLET	66289	RF1301	EA		1	*	*	*	*	10	15
1875	X2	O		2940-542-3807	TUBE ASSEMBLY, OIL	77278	RM1319G	EA		1	*	*	*	*	10	25
1876		O		5310-596-4911	WASHER, LOCK: FILTER MTG	66289	PE4	EA		4	*	*	*	*	10	2
					GROUP 03 - FUEL SYSTEM											
1877					0309 - FUEL FILTERS											
1878	X2	O		4730-639-9638	STRAINER ASSEMBLY	66289	LP43	EA		1	*	*	*	*		
1879	X1			2910-382-8768	BAIL ASSEMBLY	78480	OW447	EA		1					16	20
1880	P	O		2910-354-3834	BOWL, SEDIMENT: GLASS	78480	06137	EA		1	*	*	2	2	16	19
1881	X1			2910-305-5749	COVER, STRAINER	78480	07770	EA		1					16	16
1882	P	O		2910-142-2738	STRAINER ELEMENT, SEDIMENT	78480	OW352	EA		1	*	*	*	*	16	17

LINE NO.	(1) SOURCE, MAINT. AND RECOV. CODE (a) SOURCE	(b) MAINT.	(c) RECOV.	(2) FEDERAL STOCK NUMBER	(3) DESCRIPTION	MANUFACTURER'S CODE	MANUFACTURER'S PART NUMBER	(4) UNIT OF ISSUE	(5) QTY INC IN UNIT PACK	(6) QTY INC IN UNIT	(7) 15 DAY ORG. MAINT. ALW. (a) 1-5	(b) 6-20	(c) 21-50	(d) 51-100	(8) ILLUSTRATION (a) FIG. NO.	(b) ITEM OR SYM. NO.
1883	X1			2910-368-6657	VALVE, FUEL REGULATING: SHUT OFF	78480	07769	EA		1					16	21
1884	P	0		5330-187-2962	WASHER, NONMETALLIC: BOWL MTG	78480	06096	EA		1	2	2	4	8	16	18
1889					GROUP 06 - ELECTRICAL SYSTEM											
1889A					0605 - IGNITION COMPONENTS											
1890	P	0	R	2920-979-3504	MAGNETO (INCLUDES COMPONENTS OF REPAIR KIT, STOCK No. 2920-844-2035)	66289	Y93DS1	EA		1	*	*	*	*		
1896	X2	0			PLATE, NAME: MAGNETO	82796	A195	EA		1	SEE GRP 2210					
1931	X1			2920-360-8381	GASKET: MAGNETO MTG (COMPONENT OF GASKET SET, STOCK No. 2805-720-4773, SEE GROUP 0100, PART 1) (CAN BE MANUFACTURED FROM PAPER, STOCK No. 5330-233-5846)	66289	QD616	EA		1					36	3
1932	X2	0		2990-603-4773	GEAR, HELICAL: DRIVE	66289	GD93C3	EA		1	*	*	*	*	36	4
1933		0		5315-011-2726	PIN, COTTER: DRIVE GEAR			EA		1	*	*	*	*	36	23
1934		0		5310-012-0377	NUT, PLAIN, HEXAGON: MAGNETO MTG			EA		1	*	*	*	*	36	24
1935		0		5305-514-9662	SCREW, CAP, HEXAGON HEAD: MAGNETO MTG			EA		2	*	*	*	*	36	1
1936		0		5310-582-9930	WASHER, LOCK: MAGNETO MTG	66289	PE76A	EA		2	*	*	*	*	36	2
1937		0		5310-595-7237	WASHER, LOCK: MAGNETO MTG	66289	PE56A	EA		1	*	*	*	*	36	22
1938	P	0		2920-844-2035	REPAIR KIT, MAGNETO	82796	SK72	EA		1	*	2	2	3		
1939	X1			2920-142-1888	ARM, CONTACT SET, DISTRIBUTOR	82796	Q2437A	EA		1					36	20
1940	X1			5340-598-3180	CLIP, RETAINING: ROTOR DRIVE SHAFT	82795	B1498D	EA		1					35	3
1941	X1			5340-675-5253	CLIP, RETAINING: SWITCH	82796	C1498G	EA		1					36	9
1942	X1				CONDENSER	82796	QX2433	EA		1					36	16
1943	X1			2920-217-3489	GASKET: END CAP	82796	N2498	EA		1					36	5
1944	X1			5305-281-6387	SCREW, CAP END	82796	10S10D	EA		4					36	8
1945	X1				SEAL, CONDENSER	82796	P2473	EA		1					36	15
1946	X1			2920-356-1221	SEAL: ROTOR SHAFT	82796	G3861	EA		1					35	5
1947	X1				SPACER, GROUND SWITCH	82796	F4373	EA		1					36	10
1948	X1			5310-794-8555	WASHER, FLAT: RETAINING DRIVE END BEARING	82796	A2492D	EA		1					35	14
1949	X1			5310-205-7981	WASHER, FLAT: ROTOR SHAFT INNER SEAL	82796	A2492C	EA		1					35	4
1950	X1			5310-205-7981	WASHER: GREASE RETAINING INNER BEARING SUPPORT	82796	A2492C	EA		1					35	4
1951	X1				WASHER: GREASE RETAINING, OUTER BEARING SUPPORT	82976	E2493	EA		1					35	18
1952	X1			5310-285-1591	WASHER: ROTOR SHAFT OUTER SEAL	82796	A2492A	EA		1					35	5
1953	P	0		2920-887-1289	CABLE, IGNITION: SPARK PLUG	66289	YD300-23	EA		2	*	*	*	*	2	4
1954	X2	0			CLAMP, CABLE: SPARK PLUG WIRES	66289	PG559	EA		2	*	*	*	*	2	1
1955		0		5305-013-1238	SCREW, MACHINE: CABLE CLAMP MTG	66289	XA33	EA		2	*	*	*	*	2	3
1956	P	0		2920-841-1890	SPARK PLUG	11583	XMD18	EA		2	2	3	5	10	2	6
1957		0		5310-013-8542	WASHER, LOCK: CABLE CLAMP MTG			EA		1	*	*	*	*	2	2
1958	P	0		5330-599-5356	GASKET: SPARK PLUG	11583	A676	EA		2	*	2	2	3	2	5

LINE NO.	(1) SOURCE, MAINT. AND RECOV. CODE (a) SOURCE	(b) MAINT.	(c) RECOV.	(2) FEDERAL STOCK NUMBER	(3) DESCRIPTION	MANUFACTURER'S CODE	MANUFACTURER'S PART NUMBER	(4) UNIT OF ISSUE	(5) QTY INC IN UNIT PACK	(6) QTY INC IN UNIT	(7) 15 DAY ORG. MAINT. ALW. (a) 1-5	(b) 6-20	(c) 21-50	(d) 51-100	(8) ILLUSTRATION (a) FIG. NO.	(b) ITEM OR SYM. NO.
1959					GROUP 22 - BODY CHASSIS OR HULL, AND ACCESSORY ITEMS											
1959A					2210 - DATA PLATES											
1960	X2	0			PLATE, INSTRUCTION: ENGINE OPERATION	66289	SD252	EA		1	*	*	*	*		
1961	X2	0			PLATE, INSTRUCTION: MILITARY STANDARD PARTS	66289	SD197B	EA		1	*	*	*	*		
1962	X2	0			PLATE, NAME: MAGNETO	82796	A195	EA		1	*	*	*	*		
1963		0		5305-335-4180	SCREW, DRIVE: NAMEPLATE MTG	79575	5250	EA		2	*	*	*	*		
1964					GROUP 57 - SPRAY EQUIPMENT COMPONENTS											
1964A					5703 - AIR BLOWER ASSEMBLY											
1965	X2	0			ADAPTER: OVERBOARD OIL DRAIN	04255	3200X6	EA		1	*	*	*	*		
1966		0		4730-230-1924	ELBOW: OVERBOARD OIL DRAIN	04255	3400X6	EA		1	*	*	*	*		
1967	X2	0			FILTER, SILENCER: AIR BLOWER	82254	CFN40566	EA		1	*	*	*	*	37	
1968	X1				BODY, FILTER	82254	CFN40998	EA		1					37	1
1969	X2	0			BOLT, MACHINE: TOP	82254	GA27585	EA		1	*	*	*	*	37	5
1970	X2	0			ELEMENT, FILTER STRAINER	00736	BW8-826	EA		1	*	*	*	*	37	2
1971	X2	0			TOP ASSEMBLY	00736	BW8-800	EA		1	*	*	*	*	37	3
1972		0		5310-227-6566	WASHER, FLAT: TOP			EA		1	*	*	*	*	37	4
1973					5704 - SPRAY DUCTS AND MANIFOLDS											
1974	X2	0			NOZZLE ASSEMBLY: SPRAY	82254	CFA40961	EA		10	*	*	*	*	34	16
1975	X1				HUB ASSEMBLY	82254	CFA40964	EA		10						
1976	X1				IMPELLER: SPRAY NOZZLE	87373	ZW5139	EA		10						
1977	X1				NUT, SELF-LOCKING, HEXAGON: FACE PLATE SCREW	82254	CFA40963	EA		20						
1978	X1				PLATE, FACE	87373	ZW5155	EA		10						
1979	X1				SCREW, MACHINE: FACE PLATE TO NOZZLE, No. 4-40 THD SIZE, 3/4 IN. LG	82254	CFA40962	EA		20						
1980	X2	0			BODY: NOZZLE HEAD	82254	CFR41535-1	EA		1	*	*	*	*	38	1
1981	X2	0			CLAMP ASSEMBLY: NOZZLE ASSEMBLY	82254	CFB55020	EA		3	*	*	*	*		
1982	X2	0			COVER: NOZZLE HEAD	82254	CFR41535-5	EA		2	*	*	*	*	38	4
1983	P	0		5330-956-4306	GASKET, LONG: COVER MTG	82254	CFA41537	EA		4	*	*	2	2	38	2
1984	P	0		5330-925-0455	GASKET, SHORT: COVER MTG	82254	CFA41538	EA		4	*	*	2	2	38	3
1985	X2	0			NOZZLE HEAD ASSEMBLY: SPRAY	82254	CFR41536	EA		1	*	*	*	*	38	
1986	X2	0			SCREW, MACHINE: COVER MTG, 1/4-28 THD SIZE, 1/2 IN. LG	82254	CFA41100	EA		28	*	*	*	*	38	6
1987	X2	0			WASHER, LOCK: COVER MTG, 1/4 I.T.	96906	MS35333-25	EA		28	*	*	*	*	38	5

LINE NO.	(1) SOURCE, MAINT. AND RECOV. CODE (a) SOURCE	(b) MAINT.	(c) RECOV.	(2) FEDERAL STOCK NUMBER	(3) DESCRIPTION	MANUFACTURER'S CODE	MANUFACTURER'S PART NUMBER	(4) UNIT OF ISSUE	(5) QTY INC IN UNIT PACK	(6) QTY INC IN UNIT	(7) 30-DAY DS/GS MAINT. ALW. (a) 1-20	(b) 21-50	(c) 51-100	(8) 1-YR. ALW. PER. 100 EQUIP. CTYGCY. PLANNING	(9) DEPOT MAINT. ALW. PER. 100 EQUIP.	(10) ILLUSTRATION (a) FIG. NO.	(b) ITEM OR SYM. NO.
0001					SECTION IV - REPAIR PARTS FOR DS, GS, AND DEPOT MAINTENANCE PART I												
0002					GROUP 01 - ENGINE												
0002A					0100 - ENGINE ASSEMBLY												
0003	P	0		2805-720-4773	GASKET SET: ENGINE OVERHAUL	66289	Q21A	EA		1	2	4	8	100	100		
0004	X1			2940-774-4747	GASKET: AIR CLEANER BRACKET MTG	66289	QD667	EA		1	SEE	GRP 0304					
0005	X1			2910-358-4787	GASKET: CARBURETOR MTG	66289	QC58A	EA		1	SEE	GRP 0301					
0006	X1			2805-366-6218	GASKET: CYLINDER BLOCK TO CRANKCASE	66289	QD617	EA		1	SEE	GRP 0101					
0007	X1			2805-360-8332	GASKET: CYLINDER HEAD	66289	QD613C	EA		1	SEE	GRP 0101					
0008	X1				GASKET: ENGINE BASE TO CRANKCASE	66289	QD662-14	EA		1	SEE	GRP 0106					
0009	X1			2910-776-7900	GASKET: FUEL PUMP MTG	66289	QD670	EA		1	SEE	GRP 0302					
0010	X1			2805-776-8017	GASKET: GEAR COVER SPACER TO CRANKCASE	66289	QD661A	EA		1	SEE	GRP 0105					
0011	X1			2805-776-8016	GASKET: GEAR COVER TO SPACER	66289	QD660	EA		1	SEE	GRP 0105					
0012	X1			2805-527-7732	GASKET: GOVERNOR MTG	66289	QD638A	EA		1	SEE	GRP 0308					
0013	X1			2805-366-6270	GASKET: INTAKE AND EXHAUST MANIFOLD MOUNTING	66289	QB75	EA		3	SEE	GRP 0108					
0014	X1			2920-360-8381	GASKET: MAGNETO MTG	66289	QD616	EA		1	SEE	GRP 0605					
											PARTS II THRU VII						
0015	X1			5330-292-1503	GASKET: MAIN BEARING, RETAINER PLATE, 0.003 IN. THK (AS REQUIRED) (1)	66289	QD487B	EA		1	SEE	GRP 0102					
0016	X1			2805-366-9740	GASKET: MAIN BEARING, RETAINER PLATE, 0.006 IN. THK (AS REQUIRED) (2)	66289	QD487A	EA		2	SEE	GRP 0102					
0017	X1			2805-919-3602	GASKET: OIL FILLER CAP	66289	QD715	EA		1	SEE	GRP 0106					
0018	X1			2805-776-8115	GASKET: OIL PUMP TO CRANKCASE	66289	QD663A	EA		1	SEE	GRP 0106					
0019	X1			1650-663-4816	GASKET: TAPPET COVER PLATE	66289	QD612A	EA		2	SEE	GRP 0105					
0022					0101 - CRANKCASE, BLOCK, CYLINDER HEAD												
0023	X2	H	R		CRANKCASE ASSEMBLY	66289	BA51AS1	EA		1	*	*	*	*	*	1	28
0027		0		4730-278-4323	ADAPTER, STRAIGHT, PIPE TO TUBE: TEE TO GOVERNOR OIL LINE	66289	RF269	EA		1	SEE	GRP 0106					
											PARTS II THRU VII						
0028		0		5305-049-9608	BOLT, MACHINE: CYLINDER HEAD MTG	66289	XD19	EA		15	*	*	*	*	*	2	18
0029		0		5306-207-9166	BOLT, MACHINE: CYLINDER HEAD MTG	66289	XD21	EA		1	*	*	*	*	*	2	12
0030		0		5306-021-5377	BOLT, MACHINE: SAFETY SWITCH AND CYLINDER HEAD			EA		1	*	*	*	*	*	2	9
0031	X1			2805-366-6218	GASKET: CYLINDER BLOCK TO CRANKCASE (COMPONENT OF GASKET SET, STOCK NO. 2805-720-4773, SEE GROUP 0100)	66289	QD617	EA		1						2	7
0032	X1			2805-360-8332	GASKET: CYLINDER HEAD (COMPONENT OF GASKET SET, STOCK NO. 2805-720-4773, SEE GROUP 0100)	66289	QD613C	EA		1						2	13

LINE NO.	(1) SOURCE, MAINT. AND RECOV. CODE (a) SOURCE	(b) MAINT.	(c) RECOV.	(2) FEDERAL STOCK NUMBER	(3) DESCRIPTION	MANUFACTURER'S CODE	MANUFACTURER'S PART NUMBER	(4) UNIT OF ISSUE	(5) QTY INC IN UNIT PACK	(6) QTY INC IN UNIT	(7) 30-DAY DS/GS MAINT. ALW. (a) 1-20	(b) 21-50	(c) 51-100	(8) 1-YR. ALW. PER. 100 EQUIP. CTY OCCY. PLANNING	(9) DEPOT MAINT. ALW. PER. 100 EQUIP.	(10) ILLUSTRATION (a) FIG. NO.	(b) ITEM OR SYM. NO.
0033	X1			2910-776-7900	GASKET: FUEL PUMP MTG (COMPONENT OF GASKET SET, STOCK NO. 2805-720-4773, SEE GROUP 0100) (CAN BE MANUFACTURED FROM PAPER, STOCK NO. 5330-233-5845)	66289	CD670	EA		1	SEE GRP 0302						
0034	X2	F		2805-776-8078	NOZZLE, OIL SPRAY	66289	RF1196	EA		1	*	*	*	*	*	1	6
0035		H		5310-012-1949	NUT, PLAIN, HEXAGON: CYLINDER BLOCK TO CRANKCASE	66289	PD12	EA		6	*	*	*	*	*	6	5
0036		F		5310-013-4556	NUT, PLAIN, HEXAGON: OIL SPRAY NOZZLE	66289	PD78	EA		1	*	*	*	*	*	1	7
0037	X2	O		5330-542-1420	PACKING, PREFORMED: FUEL PUMP PRIMING SHAFT	66289	JK50	EA		1	SEE GRP 0311						
0038		O		5315-753-3893	PIN, SPRING: PRIMER STOP	66289	PA332	EA		1	*	*	*	*	*	1	29
0039	X2	H		5340-232-5723	PLUG, EXPANSION: CAMSHAFT END HOLE	66289	SA10	EA		1	*	*	*	*	*	1	12
0040	X2	H		5340-276-5843	PLUG, EXPANSION: CAMSHAFT END HOLE	66289	SA52	EA		2	*	*	*	*	*	1	9
0041		O		4730-585-2359	PLUG, PIPE: CRANKCASE OIL HOLES	66289	PF18	EA		3	*	*	*	*	*	1	26
0042		O		5305-068-0502	SCREW, CAP, HEXAGON HEAD: FUEL PUMP MOUNTING			EA		2	SEE GRP 0302						
0043	X2	O		2910-776-7903	SHAFT ASSEMBLY, PRIMING	66289	TA126	EA		1	SEE GRP 0311						
0044	X2	O		2910-347-5613	SPRING, HELICAL, TORSION: PRIMER HANDLE	66289	PM163A	EA		1	*	*	*	*	*	1	30
0045		H		5307-207-7377	STUD, PLAIN: CYLINDER BLOCK TO CRANKCASE	66289	PC337	EA		6	*	*	*	*	*	1	5
0046	X1				TUBE, HEADER: CRANKCASE OIL	66289	RF1199	EA		1						1	27
0047		O		5310-637-2400	WASHER, FLAT: CYLINDER HEAD MTG	66289	PH77A	EA		17	*	*	*	*	*	2	10
0048		H		5310-596-6696	WASHER, LOCK: CYLINDER BLOCK TO CRANKCASE	66289	PE6	EA		6	*	*	*	*	*	6	6
0049		O		5310-261-7341	WASHER, LOCK: FUEL PUMP MTG	66289	PE3	EA		2	SEE GRP 0302						
0050		F		5310-582-9926	WASHER, LOCK: OIL SPRAY NOZZLE	66289	PE46	EA		1	*	*	*	*	*	1	8
0051	X2	O		2805-718-6972	CYLINDER HEAD	66289	AB10083S1	EA		1	*	*	*	*	*	2	8
0052	X1			5340-582-3078	INSERT, SPARK PLUG	66289	PH403A3	EA		2						2	7
0053					0102 - CRANKSHAFT												
0054		O		5305-206-1071	BOLT, MACHINE: BLOWER DRIVE SHEAVE	66289	XD17	EA		3	*	*	*	*	*	4	2
0055	X2	O			BUSHING, FLANGED: BLOWER DRIVE SHEAVE, 1 7/16 IN. ID	82254	CFR40089	EA		1	*	*	*	*	*	4	3
0056	X2	H		2805-695-2181	CRANKSHAFT, ENGINE	66289	CA62S1	EA		1	*	*	*	*	*	3	5
0057	A	H		3110-100-3904	BEARING, ROLLER, TAPERED: FLYWHEEL END	66289	ME71	EA		1							
0058	P	H		3110-100-0802	CONE AND ROLLERS, TAPERED ROLLER BEARING: FLYWHEEL END	60038	420	EA		1	*	2	2	15	15	3	4
0059	P	H		3110-554-3559	CUP, TAPERED ROLLER BEARING: FLYWHEEL END	60038	414	EA		1	*	2	2	15	15	3	3

LINE NO.	(1) SOURCE, MAINT. AND RECOV. CODE (a) SOURCE	(b) MAINT.	(c) RECOV.	(2) FEDERAL STOCK NUMBER	(3) DESCRIPTION	MANUFACTURER'S CODE	MANUFACTURER'S PART NUMBER	(4) UNIT OF ISSUE	(5) QTY INC IN UNIT PACK	(6) QTY INC IN UNIT	(7) 30-DAY DS/GS MAINT. ALW. (a) 1-20	(b) 21-50	(c) 51-100	(8) 1-YR. ALW. PER. 100 EQUIP. CTYGCY. PLANNING	(9) DEPOT MAINT. ALW. PER. 100 EQUIP.	(10) ILLUSTRATION (a) FIG. NO.	(b) ITEM OR SYM. NO.
0060	A	H			BEARING ASSEMBLY, ROLLER: TAKE-OFF END	66289	ME130	EA		1							
0061	P	H		3110-100-3552	CONE AND ROLLERS, TAPERED ROLLER BEARING: TAKE-OFF END	60038	26881	EA		1	*	2	2	15	15	3	6
0062	P	H		3110-293-8819	CUP, TAPERED ROLLER BEARING: TAKE-OFF END	60038	26822A	EA		1	*	2	2	15	15	3	7
0063	X2	F			GEAR, HELICAL: CRANKSHAFT, TIMING	66289	GA36A1	EA		1	*	*	*	*	*		
0064		F		5315-616-5523	KEY, WOODRUFF: CRANKSHAFT GEAR, No. 8	66289	PL53	EA			*	*	*	*	*	3	9
0065	X2	F		2805-360-8345	SLINGER: CRANKSHAFT OIL, FLYWHEEL END	66289	RK170	EA		1	*	*	*	*	*	3	1
0066	X1			2805-366-9740	GASKET: MAIN BEARING RETAINER PLATE (As REQUIRED) (2) (COMPONENT OF GASKET SET, STOCK No. 2805-720-4773, SEE GROUP 0100)	66289	QD487A	EA		2						1	20
0067	X1			5330-292-1503	GASKET: MAIN BEARING RETAINER PLATE, 0.003 IN. THK (As REQUIRED) (1) (COMPONENT OF GASKET SET, STOCK No. 2805-720-4773, SEE GROUP 0100)	66289	QD487B	EA		1						1	15
0068		O		5315-952-3107	KEY, MACHINE: BLOWER DRIVE SHEAVE			EA		1	*	*	*	*	*	3	8
0069		F		5315-619-7342	KEY, WOODRUFF: FLYWHEEL, No. 23	66289	PL83	EA		1	*	*	*	*	*	3	10
0070	X2	O			NUT ASSEMBLY, CRANK	66289	UC75FS1	EA		1	*	*	*	*	*	4	14
0071		F		5310-584-8731	NUT, PLAIN, HEXAGON: MAIN BEARING PLATE MTG	66289	PD11	EA		4	*	*	*	*	*	1	19
0072	X1			5310-692-8335	NUT, CRANK	66289	UC75F	EA		1						4	13
0073		O		5315-276-5762	PIN, SPRING: CRANK NUT	66289	PA333	EA		1	*	*	*	*	*	4	12
0074		O		5315-271-3012	PIN, SPRING: SPRAY PUMP SHEAVE			EA		1	*	*	*	*	*	4	21
0075	X2	H		2805-695-2180	PLATE ASSEMBLY, MAIN BEARING (INCLUDES CUP, STOCK No. 3110-100-0556)	66289	BG224DS2	EA		1	*	*	*	*	*		
0076	X1			2805-695-2179	PLATE, BEARING RETAINER: MAIN BEARING	66289	BG224D	EA		1						1	18
0077	P	H		2805-366-6238	RETAINER, PACKING: CRANKSHAFT MAIN BEARING	66289	SD43	EA		1	*	2	2	20	100	1	16
0078	P	H		2805-366-6240	SEAL: CRANKSHAFT MAIN BEARING	66289	HF261	EA		1	*	2	2	20	100	1	17
0079	X2	H		2805-366-6231	RETAINER, BEARING: FLYWHEEL END	66289	BG209	EA		1	*	*	*	*	*	1	3
0080		H		5305-958-5252	SCREW, MACHINE: GEAR END BEARING PLATE MOUNTING	66289	XC17	EA		4	*	*	*	*	*	1	1
0081	P	F		5330-641-2087	SEAL, PLAIN, ENCASED: CRANKSHAFT FRONT	66289	PH299	EA		1	*	2	2	20	100	8	14
0082	X2	O			SHEAVE, CRANKSHAFT: SPRAY PUMP	81336	B13200E5435	EA		1	*	*	*	*	*	4	1
0084	P	H		2805-715-5327	SHIM: MAIN BEARING PLATE (As REQUIRED)	66289	QF81A	EA			*	*	2	10	50	1	21
0085	P	H		2805-715-5326	SHIM: MAIN BEARING RETAINER PLATE (As REQUIRED)	66289	QF81	EA			*	*	2	10	50	1	14
0086		H		5307-207-7376	STUD, PLAIN: MAIN BEARING PLATE, TAKE-OFF			EA		4	*	*	*	*	*	1	13
0087		O		5310-641-9308	WASHER, LOCK: CRANK NUT	66289	PE59	EA		1	*	*	*	*	*	4	18
0088		H		5310-596-4908	WASHER, LOCK: GEAR END BEARING PLATE MTG	66289	PE49	EA		4	*	*	*	*	*	1	2
0089		F		5310-261-7340	WASHER, LOCK: MAIN BEARING PLATE MTG			EA		4	*	*	*	*	*	1	11

LINE NO.	(1) SOURCE, MAINT. AND RECOV. CODE (a) SOURCE	(b) MAINT.	(c) RECOV.	(2) FEDERAL STOCK NUMBER	(3) DESCRIPTION	MANUFACTURER'S CODE	MANUFACTURER'S PART NUMBER	(4) UNIT OF ISSUE	(5) QTY INC IN UNIT PACK	(6) QTY INC IN UNIT	(7) 30-DAY DS/GS MAINT. ALW. (a) 1-20	(b) 21-50	(c) 51-100	(8) 1-YR. ALW. PER. 100 EQUIP. CTY/GCY. PLANNING	(9) DEPOT MAINT. ALW. PER. 100 EQUIP.	(10) ILLUSTRATION (a) FIG. NO.	(b) ITEM OR SYM NO.
0090					0103 - FLYWHEEL ASSEMBLY												
0091		O		5305-206-1071	BOLT, MACHINE: GENERATOR PULLEY TO FLYWHEEL	66289	XD17	EA		4	*	*	*	*	*	4	2
0092	X2	F			FLYWHEEL ENGINE	66289	NC145G4S1	EA		1	*	*	*	*	*	4	7
0093	X2	H		2805-767-9386	GEAR, SPUR	66289	GH46	EA		1	*	*	*	*	*	4	6
0094		H		5305-017-9117	SETSCREW: RING GEAR	66289	XE17	EA		3	*	*	*	*	*	4	5
0095	X2	O			PULLEY, GENERATOR DRIVE	66289	MD292-4	EA		1	*	*	*	*	*	4	20
0096		O		5310-012-0214	WASHER, LOCK: GENERATOR PULLEY TO FLYWHEEL SCREW			EA		4	*	*	*	*	*	4	8
0097					0104 - PISTONS, CONNECTING RODS												
0098	P	H		2805-715-0424	PISTON: STD (INCLUDES 2 EACH RING, STOCK NO. 5340-374-9707)	96906	MS35903-1	EA		2	*	*	2	10	20	5	4
0099	X1			2805-554-1005	PIN, PISTON	96906	MS13996-2	EA		2						5	5
0100	X2	H		2805-839-5276	PISTON ASSEMBLY: 0.020 IN. OVERSIZE (INCLUDES 2 EACH RING, STOCK NO. 5340-374-9707)	96906	MS35903-2	EA		2	*	*	*	*	*		
0101	X1			2805-554-1005	PIN, PISTON	96906	MS13996-2	EA		2							
0102	X2	H		2805-839-5275	PISTON ASSEMBLY: 0.040 IN. OVERSIZE (INCLUDES 2 EACH RING, STOCK NO. 5340-374-9707)	96906	MS35903-3	EA		2	*	*	*	*	*		
0103	X1			2805-554-1005	PIN, PISTON	96906	MS13996-2	EA		2							
0104	P	H		5340-374-9707	RING, RETAINING: PISTON PIN	96906	MS13962-1	EA		4	2	2	3	40	40	5	6
0105	P	H		2805-608-4998	RING SET, PISTON: STANDARD	81336	RSMS35903-1	EA		2	2	3	5	60	20		
0106	X1			2805-529-8379	RING, PISTON: COMPRESSION, STANDARD	96906	MS13933-4	EA		2						5	1
0107	X1				RING, PISTON: OIL STANDARD	96906	MS13931-4	EA		2						5	3
0108	X1			2805-517-9809	RING, PISTON: SCRAPER, STANDARD	96906	MS13932-4	EA		2						5	2
0109	X2	H		2805-388-6660	RING, SET: PISTON, 0.020 IN. OVERSIZE	81336	RSMS13959-2	EA		2	*	*	*	*	*		
0110	X1			2805-517-9810	RING, PISTON: COMPRESSION, 0.020 IN. OVERSIZE	96906	MS13933-5	EA		2							
0111	X1				RING, PISTON: OIL, 0.020 IN. OVERSIZE	96906	MS13931-5	EA		2							
0112	X1				RING, PISTON: SCRAPER, 0.020 IN. OVERSIZE	96906	MS13932-5	EA		2							
0113	X2	H		2805-388-6661	RING SET, PISTON: 0.040 IN. OVERSIZE	81336	RSMS13959-3	EA		2	*	*	*	*	*		
0114	X1			2805-528-5799	RING, PISTON: COMPRESSION, 0.040 IN. OVERSIZE	96906	MS13933-6	EA		2							
0115	X1				RING, PISTON: OIL, 0.040 IN. OVERSIZE	96906	MS13931-6	EA		2							
0116	X1				RING, PISTON: SCRAPER, 0.040 IN. OVERSIZE	96906	MS13932-6	EA		2							
0117	P	H		2805-339-5595	ROD ASSEMBLY, CONNECTING	66289	DA65S1	EA		2	*	*	2	10	20		
0118	P	H		2805-571-1100	BEARING, SLEEVE	96906	MS13995-1	EA		4	3	5	10	120	400	5	10

LINE NO.	(1) SOURCE, MAINT. AND RECOV. CODE (a) SOURCE	(b) MAINT.	(c) RECOV.	(2) FEDERAL STOCK NUMBER	(3) DESCRIPTION	MANUFACTURER'S CODE	MANUFACTURER'S PART NUMBER	(4) UNIT OF ISSUE	(5) QTY INC IN UNIT PACK	(6) QTY INC IN UNIT	(7) 30-DAY DS/GS MAINT. ALW. (a) 1-20	(b) 21-50	(c) 51-100	(8) 1-YR. ALW. PER 100 EQUIP. CTYGCY. PLANNING	(9) DEPOT MAINT. ALW. PER. 100 EQUIP.	(10) ILLUSTRATION (a) FIG. NO.	(b) ITEM OR SYM. NO.
0119	P	H		2805-374-9710	BEARING, SLEEVE: PISTON PIN	96906	MS13963-1	EA		2	2	3	5	60	200	5	7
0120	P	H		5306-514-8458	BOLT, SHOULDER: CONNECTING ROD	66289	PB148	EA		4	*	*	2	8	10	5	8
0121		H		5310-265-9214	NUT, PLAIN, HEXAGON: CONNECTING ROD BOLT	66289	PD10	EA		4	*	*	*	*	*	5	11
0122	P	H		5310-514-7091	NUT, STAMPED: CONNECTING ROD BOLT	66289	PD181	EA		4	3	5	10	120	120	5	12
0123	X1				ROD, CONNECTING	66289	DA65	EA		2						5	9
0124					0105 - VALVES, CAMSHAFTS AND TIMING SYSTEM												
0125		F		5305-206-1071	BOLT, MACHINE: CAMSHAFT GEAR MTG	66289	XD1	EA		3	*	*	*	*	*	7	3
0126		F		5305-049-9608	BOLT, MACHINE: GEAR COVER	66289	XD19	EA		8	*	*	*	*	*	8	13
0127		F		5306-543-4308	BOLT, MACHINE: GEAR COVER TO SPACER PLATE			EA		2	*	*	*	*	*	8	8
0128		0		5306-206-9166	BOLT, MACHINE: VALVE INSPECTION PLATE MOUNTING	66289	XD21	EA		1	*	*	*	*	*	2	12
0129	X2	H		2805-627-3467	CAMSHAFT, ENGINE	66289	EA106C	EA		1	*	*	*	*	*	7	10
0130	P	F		2805-374-9746	CAP, VALVE STEM	96906	MS13998-1	EA		4	2	2	3	40	40	6	11
0131	X2	F			COVER, GEAR	66289	BD103C4S1	EA		1	*	*	*	*	*	8	
0132	X1				COVER	66289	BD103C4	EA		1						8	3
0133		H		5340-050-1591	PLUG, EXPANSION: BREATHER HOLE	66289	SA26	EA		1	*	*	*	*	*	8	4
0134		0		4730-278-3395	PLUG, PIPE: TIMING HOLE	66289	PF25	EA		1	*	*	*	*	*	8	12
0135	P	F		5330-641-2087	SEAL, PLAIN, ENCASED: CRANKSHAFT FRONT	66289	PH299	EA		1	SEE GRP 0102						
0136	X2	F		2990-603-4775	SHAFT, GOVERNOR DRIVE	66289	TC388-3S1	EA		1	SEE GRP 0303						
0137	X1			2805-776-8017	GASKET: GEAR COVER SPACER TO CRANKCASE (COMPONENT OF GASKET SET, STOCK NO. 2805-720-4773, SEE GROUP 0100)	66289	QD661A	EA		1						8	9
0138	X1			2805-776-8016	GASKET: GEAR COVER TO SPACER (COMPONENT OF GASKET SET, STOCK NO. 2805-720-4773, SEE GROUP 0100)	66289	QD660	EA		1						8	5
0139	X1			1650-663-4816	GASKET: VALVE INSPECTION PLATE (COMPONENT OF GASKET SET, STOCK NO. 2805-720-4773, SEE GROUP 0100) (CAN BE MANUFACTURED FROM PAPER, STOCK NO. 5330-233-5845)	66289	QD612A	EA		2						2	14
0140	X2	F		2805-739-9927	GEAR, BEVEL: CAMSHAFT	66289	GB45C	EA		1	*	*	*	*	*	7	7
0141	X2	F		2805-554-9029	GEAR, HELICAL: CRANKSHAFT	66289	GA36A1	EA		1	*	*	*	*	*	3	2
0142	P	F		2805-652-9757	GUIDE, ENGINE POPPET	66289	AD41A	EA		4	*	2	2	20	120	6	2
0143	P	F		2805-309-8040	SEAT, VALVE	66289	HG227D	EA		4	*	2	2	12	80	6	3
0145		F		5315-366-6242	PIN, STRAIGHT HEADED: CAMSHAFT	66289	PF52	EA		1	*	*	*	*	*	7	1
0146		H		5315-251-9984	PIN, STRAIGHT, HEADLESS: GEAR COVER DOWEL	66289	PA291	EA		2	*	*	*	*	*	1	4
0147	X2	0		2805-708-9195	PIN, SUPPORT: GOVERNOR ADJUSTING SCREW AND VALVE INSPECTION PLATE	66289	TC427B	EA		1	*	*	*	*	*	2	17
0148	X2	F			PLATE, RETAINING: CAMSHAFT GEAR	66289	PH452	EA		1	*	*	*	*	*	7	6
0149	X2	0		2805-360-8334	PLATE, VALVE, INSPECTION	66289	SA68	EA		2	*	*	*	*	*	2	15

LINE NO.	(1) SOURCE, MAINT. AND RECOV. CODE (a) SOURCE	(b) MAINT.	(c) RECOV.	(2) FEDERAL STOCK NUMBER	(3) DESCRIPTION	MANUFACTURER'S CODE	MANUFACTURER'S PART NUMBER	(4) UNIT OF ISSUE	(5) QTY INC IN UNIT PACK	(6) QTY INC IN UNIT	(7) 30-DAY DS/GS MAINT. ALW. (a) 1-20	(b) 21-50	(c) 51-100	(8) 1-YR. ALW. PER. 100 EQUIP. CTYGCY. PLANNING	(9) DEPOT MAINT. ALW. PER. 100 EQUIP.	(10) ILLUSTRATION (a) FIG. NO.	(b) ITEM OR SYM. NO.
0150	X2	F		2805-366-6248	PLUNGER, CAMSHAFT, THRUST	66289	PF101	EA		1	*	*	*	*	*	7	2
0152	P	F		2805-528-6097	RETAINER, VALVE SPRING SEAT	96906	MS13997-1	EA		8	2	2	3	40	80	6	10
0153		H		5305-068-0500	SCREW, CAP, HEXAGON HEAD: GEAR COVER SPACER TO CRANKCASE	66289	XD4	EA		4	*	*	*	*	*	8	11
0154	P	F		2805-339-5589	SEAT, VALVE SPRING	66289	AG30	EA		4	*	*	2	8	40	6	9
0155	X2	H			SPACER, GEAR COVER	66289	WE2931S1	EA		1	*	*	*	*	*	8	6
0156	X2	F		2805-366-6249	SPRING, HELICAL, COMPRESSION: CAMSHAFT PLUNGER	66289	PM108	EA		1	*	*	*	*	*	7	5
0157	P	F		2805-730-6327	SPRING, HELICAL, COMPRESSION: VALVE	66289	AF49C	EA		4	2	3	7	80	60	6	8
0158	P	F		2805-528-6396	VALVE, POPPET, ENGINE: INTAKE AND EXHAUST	96906	MS13999-2	EA		4	2	2	3	40	60	6	1
0159		O		5310-221-3129	WASHER, FLAT: VALVE INSPECTION PLATE MOUNTING	66289	PH14	EA		2	*	*	*	*	*	2	16
0160		F		5310-582-9926	WASHER, LOCK: CAMSHAFT GEAR MTG, SCREW	66289	PE46	EA		3	*	*	*	*	*	7	4
0161		F		5310-012-0214	WASHER, LOCK: GEAR COVER AND SPACER TO CRANKCASE SCREW			EA		10	*	*	*	*	*	8	7
0162		H		5310-261-7341	WASHER, LOCK: GEAR COVER SPACER TO CRANKCASE SCREW	66289	PE3	EA		4	*	*	*	*	*	8	10
0163					0166 - ENGINE LUBRICATION SYSTEM												
0165	X2	F		3110-100-6180	BALL, BEARING: CHECK	66289	ME38	EA		1	*	*	*	*	*	9	6
0166	X2	F			BASE, ENGINE: OIL PAN	66289	BB1286C4	EA		1	*	*	*	*	*	11	2
0167	P	F		2805-695-2183	BODY ASSEMBLY, OIL PUMP	66289	KA6301S1	EA		1	*	*	*	5	25	9	
0168	X1			3110-100-6180	BALL, BEARING: CHECK	66289	ME38	EA		1							
0169	X1				BODY, OIL PUMP	66289	KA63B1	EA		1						9	8
0170	X1			2805-695-2186	INSERT, BODY	66289	KF30	EA		1							
0171	X1			5340-550-5635	PLUG, EXPANSION: OIL PUMP	66289	SA93	EA		1							
0172	X1			2805-741-0380	RETAINER, BALL: PUMP OUTLET	66289	KF28	EA		1							
0173	X1			5340-741-0246	SPRING, HELICAL, COMPRESSION: CHECK BALL	66289	PM165-1	EA		1							
0175	X2	O		2805-560-9300	BREATHER ASSEMBLY	66289	LO84C	EA		1	*	*	*	*	*	12	13
0176	X2	F		2805-776-8114	CAP, PUSH ROD, PLUNGER	66289	KF25	EA		1	*	*	*	*	*	9	1
0177	X2	F			CUP, STRAINER	66289	RW178	EA		1	*	*	*	*	*	9	9
0178		O		4730-068-9388	ELBOW, PIPE: RETURN LINE TO BASE	04255	3400X2	EA		1	*	*	*	*	*	10	17
0179		O		4730-640-5832	ELBOW, PIPE TO TUBE: OIL FILTER OUTLET	79470	49X4	EA		1	*	*	*	*	*	10	19
0180	X2	H		4730-692-8775	ELBOW, TUBE: GOVERNOR BODY TO OIL LINE	66289	RF270-4	EA		1	*	*	*	*	*	14	18
0181	X2	O		2805-708-9194	FILLER AND GAGE ASSEMBLY: LUBE OIL	66289	R123	EA		1	*	*	*	*	*		
0182	X1			4510-919-3101	BODY, FILLER	66289	R986	EA		1						1	24
0183	X1			6680-718-7016	GAGE AND CAP ASSEMBLY	66289	RJ15281	EA		1						1	22
0184	X1			2805-919-3602	GASKET: OIL FILLER CAP (COMPONENT OF GASKET SET, STOCK NO. 2805-720-4773, SEE GROUP 0100)	66289	09715	EA		1						1	23
0185	X2	O			NIPPLE, PIPE: FILLER GAGE	66289	LJ310	EA		1	*	*	*	*	*	1	25

LINE NO.	(1) SOURCE, MAINT. AND RECOV. CODE (a) SOURCE	(b) MAINT.	(c) RECOV.	(2) FEDERAL STOCK NUMBER	(3) DESCRIPTION	MANUFACTURER'S CODE	MANUFACTURER'S PART NUMBER	(4) UNIT OF ISSUE	(5) QTY INC IN UNIT PACK	(6) QTY INC IN UNIT	(7) 30-DAY DS, GS MAINT. ALW. (a) 1-20	(b) 21-50	(c) 51-100	(8) 1-YR. ALW. PER. 100 EQUIP. CTYGCY. PLANNING	(9) DEPOT MAINT. ALW. PER. 100 EQUIP.	(10) ILLUSTRATION (a) FIG. NO.	(b) ITEM OR SYM. NO.
0186	M	0			GASKET: BREATHER MTG	66289	CD569	EA		1						12	12
					MANUFACTURE FROM:												
0202A	P	0		5330-270-8469	PAPER, GASKET (2 IN. X 2 IN. REQUIRED)			YD			SEE GRP 950						
0204	X1				GASKET: ENGINE BASE TO CRANKCASE (COMPONENT OF GASKET SET, STOCK NO. 2805-720-4773, SEE GROUP 0100)	66289	CD562-14	EA		1						11	1
0205	X1			2805-776-8115	GASKET: OIL PUMP TO CRANKCASE (COMPONENT OF GASKET SET, STOCK NO. 2805-720-4773, SEE GROUP 0100)	66289	CD563A	EA		1						9	7
0211	P	0		2940-542-3807	LINE ASSEMBLY, OIL: RETURN	66289	RH3198	EA		1	*	*	2	10	10	10	18
0212		0		4730-278-6337	PLUG, PIPE: OIL DRAIN	66289	XK7A	EA		1	*	*	*	*	*	11	5
0213	P	F		2805-741-0242	PLUNGER, OIL PUMP	66289	KF23-1	EA		1	*	*	*	5	25	9	3
0214	P	F		2805-741-0243	RETAINER, CHECK BALL	66289	RH50A	EA		1	*	*	*	5	10	9	5
0215	X2	F		2805-536-8776	ROD, PUSH, PLUNGER	66289	KF24	EA		1	*	*	*	*	*	9	2
0216	X2	F			SCREW, CAP, HEXAGON HEAD: BASE TO CRANKCASE	66289	XD113	EA		2	*	*	*	*	*	11	6
0217		F		5305-068-0510	SCREW, CAP, HEXAGON HEAD: BASE TO CRANKCASE	66289	XD27	EA		8	*	*	*	*	*	1	10
0218		F		5306-270-9734	SCREW, CAP, HEXAGON HEAD: OIL PUMP MTG	66289	XD5	EA		3	*	*	*	*	*	9	12
0219	P	F		5340-147-3745	SPRING, HELICAL, COMPRESSION: PLUNGER	66289	RH58	EA		1	*	*	*	5	25	9	4
0220	X2	F		2940-593-2293	STRAINER, OIL	66289	RD107A	EA		1	*	*	*	*	*	9	11
0222		F		5310-530-9636	WASHER, FLAT: BASE TO CRANKCASE SCREW			EA		2	*	*	*	*	*	11	7
0223		F		5310-261-7340	WASHER, LOCK: BASE TO CRANKCASE SCREW			EA		8	*	*	*	*	*	1	11
0225		F		5310-261-7341	WASHER, LOCK: OIL PUMP MTG	66289	PE3	EA		3	*	*	*	*	*	9	13
0226	X2	F		5330-684-7734	WASHER, STRAINER SPACER	66289	PH387	EA		1	*	*	*	*	*	9	10
0227					0107 - ENGINE STARTING SYSTEM												
0228	X2	0			CRANK, HAND	97403	13200E5436	EA		1	*	*	*	*	*	4	17
0229					0108 - MANIFOLDS												
0230		0		5310-776-8112	CLAMP WASHER: INTAKE AND EXHAUST MANIFOLD MTG	66289	PH356	EA		2	*	*	*	*	*	16	3
0231	X1			2805-366-6270	GASKET: EXHAUST MANIFOLD MTG (COMPONENT OF GASKET SET, STOCK NO. 2805-720-4773, SEE GROUP 0100)	66289	QB75	EA		2						17	7
0232	X1			2805-366-6270	GASKET: INTAKE MANIFOLD MTG (COMPONENT OF GASKET SET, STOCK NO. 2805-720-4773, SEE GROUP 0100)	66289	QB75	EA		1						16	6
0233	X2	0		2805-353-5889	MANIFOLD, EXHAUST	66289	LD242	EA		1	*	*	*	*	*	17	6
0234	X2	0		2805-776-8111	MANIFOLD, INTAKE	66289	LC266A	EA		1	*	*	*	*	*	16	5
0235		0		5310-012-6189	NUT, PLAIN, HEXAGON: INTAKE AND EXHAUST MANIFOLD MTG			EA		2	*	*	*	*	*	16	1

LINE NO.	(1) SOURCE, MAINT. AND RECOV. CODE (a) SOURCE	(b) MAINT.	(c) RECOV.	(2) FEDERAL STOCK NUMBER	(3) DESCRIPTION	MANUFACTURER'S CODE	MANUFACTURER'S PART NUMBER	(4) UNIT OF ISSUE	(5) QTY INC IN UNIT PACK	(6) QTY INC IN UNIT	(7) 30-DAY DS/GS MAINT. ALW. (a) 1-20	(b) 21-50	(c) 51-100	(8) 1-YR. ALW. PER. 100 EQUIP. CTYGCY. PLANNING	(9) DEPOT MAINT. ALW. PER. 100 EQUIP.	(10) ILLUSTRATION (a) FIG. NO.	(b) ITEM OR SYM. NO.
0236		0		4730-187-4200	PLUG, PIPE: INTAKE MANIFOLD	66289	XK1	EA		1	*	*	*	*	*	16	28
0236A		0		5307-011-2572	STUD, PLAIN: MANIFOLD MTG	66289	PC110	EA		2	*	*	*	*	*	6	12
0237		0		5310-637-9541	WASHER, LOCK: INTAKE AND EXHAUST MANIFOLD MTG			EA		2	*	*	*	*	*	16	2
0238					GROUP 03 - FUEL SYSTEM												
0238A					0301 - CARBURETOR												
0239		0		5306-018-0078	BOLT, MACHINE: CARBURETOR MTG			EA		2	*	*	*	*	*	16	4
0240	P	0		2910-715-5328	CARBURETOR, FLOAT (INCLUDES COMPONENTS OF GASKET SET, STOCK NO. 2910-807-7153)	66289	L63L	EA		1	*	*	2	10	15	16	23
0241		0		4730-287-3281	PLUG, PIPE: CARBURETOR BOWL DRAIN			EA		1	*	*	*	*	*	16	22
0242	X1			2910-358-4787	GASKET: CARBURETOR MTG (COMPONENT OF GASKET SET, STOCK NO. 2805-720-4773, SEE GROUP 0100) (CAN BE MANUFACTURED FROM PAPER, STOCK NO. 5330-233-5847)	66289	QC58A	EA		1						16	26
0243	P	0		2910-807-7153	GASKET SET, CARBURETOR	79960	C181-329	EA		1	2	4	8	100	50		
0244	X1				GASKET: BOWL TO BODY	79960	C142-74	EA		1						16	24
0245	X1			5330-362-1447	WASHER, ADJUSTMENT: MAIN JET	79960	T56-23	EA		1							
0246	X1			5330-291-9873	WASHER, NONMETALLIC: DISCHARGE JET	79960	T56-48	EA		1							
0247	X1			5330-358-5683	WASHER, NONMETALLIC: MAIN JET	79960	T56-24	EA		1							
0248	X1			5330-729-5106	WASHER, SEAT: FUEL VALVE	79960	T56-70	EA		1							
0249		0		5310-596-4911	WASHER, LOCK: CARBURETOR MTG	66289	PE4	EA		2	*	*	*	*	*	16	29
0250					0302 - FUEL PUMPS												
0251	X1			2910-776-7900	GASKET: FUEL PUMP MTG (COMPONENT OF GASKET SET, STOCK NO. 2805-720-4773, SEE GROUP 0100) (CAN BE MANUFACTURED FROM PAPER, STOCK NO. 5330-233-5845)	66289	QD670	EA		1						16	10
0252	P	0		2910-776-7902	PUMP, FUEL	66289	LP42C	EA		1	2	2	3	30	75	16	9
0253		0		5305-068-0502	SCREW, CAP, HEXAGON HEAD: FUEL PUMP MTG			EA		2	*	*	*	*	*	16	15
0254		0		5310-261-7341	WASHER, LOCK: FUEL PUMP MTG	66289	PE3	EA		2	*	*	*	*	*	16	14
0255					0304 - AIR CLEANER												
0256	X2	0		2940-695-8797	AIR, CLEANER	66289	LO-83	EA		1	*	*	*	*	*	12	7
0257	X1				CUP ASSEMBLY, OIL	61976	17688	EA		1						12	5
0258	X1				FILTER AND CAP	61976	17983	EA		1						12	3
0259	P	0		5330-292-0320	GASKET: CAP AND FILTER MTG, FIBER	61976	615A1	EA		1	*	*	2	10	100	12	4
0260	P	0		2940-366-9747	GASKET: FILTER MTG, CORK	61976	A7419	EA		1	*	*	2	10	100	12	6

LINE NO.	(1) SOURCE, MAINT. AND RECOV. CODE (a) SOURCE	(b) MAINT.	(c) RECOV.	(2) FEDERAL STOCK NUMBER	(3) DESCRIPTION	MANUFACTURER'S CODE	MANUFACTURER'S PART NUMBER	(4) UNIT OF ISSUE	(5) QTY INC IN UNIT PACK	(6) QTY INC IN UNIT	(7) 30-DAY DS/GS MAINT. ALW. (a) 1-20	(b) 21-50	(c) 51-100	(8) 1-YR. ALW. PER. 100 EQUIP. CTY/CCY. PLANNING	(9) DEPOT MAINT. ALW. PER. 100 EQUIP.	(10) ILLUSTRATION (a) FIG. NO.	(b) ITEM OR SYM. NO.
0261		0		5306-531-1798	BOLT, MACHINE: BRACKET MTG			EA		2	*	*	*	*	*	12	10
0262	X2	0		2940-374-3084	BRACKET ASSEMBLY, AIR CLEANER	66289	B1-286S1	EA		1	*	*	*	*	*	12	9
0263	X2	0		4730-202-7760	CLAMP, HOSE: HOSE TO CARBURETOR RETAINING	66289	LK11	EA		2	*	*	*	*	*	12	15
0264	X1			2940-774-4747	GASKET: AIR CLEANER BRACKET MTG (COMPONENT OF GASKET SET, STOCK NO. 2805-720-4773, SEE GROUP 0100) (CAN BE MANUFACTURED FROM PAPER, STOCK NO. 5330-233-5846)	66289	QD667	EA		1						12	14
0265	M	0			HOSE, PREFORMED, RUBBER: AIR CLEANER TO CARBURETOR	66289	LL125	EA		1						12	16
0265A	P	0		4720-218-5644	MANUFACTURE FROM: HOSE, RUBBER (12 IN. REQUIRED)			FT			SEE GRP 9501						
0266		0		5310-366-6163	NUT, PLAIN, WING: AIR CLEANER COVER, SELF-LOCKING	66289	PD147	EA		1	*	*	*	*	*	12	1
0267		0		5307-025-7993	STUD: AIR CLEANER MTG STEEL	66289	PC447	EA		1	*	*	*	*	*	12	8
0268		0		5310-543-2705	WASHER, LOCK: AIR CLEANER COVER MTG			EA		1	*	*	*	*	*	12	2
0269		0		5310-596-4911	WASHER, LOCK: BRACKET MTG	66289	PE4	EA		2	*	*	*	*	*	12	11
0270					0306 - TANKS, LINES, FITTINGS												
0271		0		4730-278-4323	ADAPTER, STRAIGHT, PIPE TO TUBE: CARBURETOR TO FUEL LINE	66289	RF269	EA		1	*	*	*	*	*	16	13
0272		0		4730-640-5832	ELBOW, PIPE TO TUBE: FUEL LINE TO FUEL PUMP	66289	RF270	EA		1	*	*	*	*	*	16	11
0273		0		4730-814-4132	ELBOW, PIPE TO TUBE: TANK TO STARTER	30327	269P	EA		1	*	*	*	*	*	16	7
0274	M	0			LINE, FUEL: FUEL PUMP TO CARBURETOR	66289	RM1122	EA		1						16	12
0274A	X2	0		4730-011-6452	MANUFACTURE FROM: NUT, TUBE COUPLING	79470	1110X4	EA		2	*	*	*	*	*		
0274B	P	0		4710-277-5525	TUBE, COPPER (8 IN. REQUIRED)			FT			SEE GRP 9501						
0275	P	0		4710-872-1781	LINE, FUEL, PLASTIC: TEFLON, 3/16 IN. ID, 1/4 IN. OD, 1/32 WALL THICK, 53 IN. LG	81336	C13200E5428-1	EA		1	*	*	2	10	10	13	2
0276	X2	0			MOUNT, FUEL TANK	82254	CFC40018	EA		1	*	*	*	*	*	13	11
0277		0		4730-277-5575	NIPPLE, PIPE: FUEL STRAINER TO FUEL PUMP	66289	RF794	EA		1	*	*	*	*	*	16	8
0278		0		5310-584-5005	NUT, PLAIN, HEXAGON: STRAP CLAMPING AND TANK MTG			EA		6	*	*	*	*	*	13	9
0279		0		5305-068-0502	SCREW, CAP, HEXAGON HEAD: TANK MOUNT TO FRAME			EA		4	*	*	*	*	*	13	10
0280		0		5305-988-1170	SCREW, MACHINE: FUEL TANK STRAP CLAMPING			EA		2	*	*	*	*	*	13	7
0281	X2	0		2910-816-4057	STRAP, STEEL: FUEL TANK HOLD DOWN	66289	PG488	EA		2	*	*	*	*	*	13	6
0282	X2	0			TANK, FUEL: GASOLINE	66289	WE302ES1	EA		1	*	*	*	*	*	13	5
0283	X2	0		2910-580-0607	CAP, FUEL TANK	66289	RC109S1	EA		1	*	*	*	*	*	13	3
0284	P	0		5330-582-4084	WASHER, NONMETALLIC: FUEL TANK CAP	66289	QD728	EA		1	*	*	*	3	15	13	4
0285		0		4730-011-8831	PLUG, PIPE: TANK DRAIN	70470	3150X2	EA		1	*	*	*	*	*	13	12

LINE NO.	(1) SOURCE, MAINT AND RECOV. CODE (a) SOURCE	(b) MAINT.	(c) RECOV.	(2) FEDERAL STOCK NUMBER	(3) DESCRIPTION	MANUFACTURER'S CODE	MANUFACTURER'S PART NUMBER	(4) UNIT OF ISSUE	(5) QTY INC IN UNIT PACK	(6) QTY INC IN UNIT	(7) 30-DAY DS. GS MAINT. ALW. (a) 1-20	(b) 21-50	(c) 51-100	(8) 1-YR. ALW. PER. 100 EQUIP. CTYSCY. PLANNING	(9) DEPOT MAINT. ALW. PER. 100 EQUIP.	(10) ILLUSTRATION (a) FIG. NO.	(b) ITEM OR SYM. NO.
0286	M	O			TUBE, SYPHON: FUEL TANK	82254	CFA40045	EA		1						13	1
					MANUFACTURE FROM:												
0286A		O		4730-814-4132	ELBOW, PIPE TO TUBE	30327	269P	EA		1	*	*	*	*	*		
0286B	P	O		4710-277-5525	TUBE, COPPER (12 IN. REQUIRED)			FT			SEE GRP 9501						
0287		O		5310-527-3289	WASHER, LOCK: TANK MOUNT TO FRAME AND STRAP CLAMP SCREW			EA		6	*	*	*	*	*	13	8
0288					0308 - ENGINE SPEED GOVERNOR AND CONTROLS												
0289	X2	O		2990-374-3163	CONTROL ASSEMBLY, GOVERNOR	66289	TT66	EA		1	*	*	*	*	*	15	
0290	M	O			CHAIN, SINGLE JACK	82254	CFR40829	EA		1						15	12
					MANUFACTURE FROM:												
0290A	P	O		2990-085-9035	CHAIN, WELDLESS (10 IN. REQUIRED)			FT			SEE GRP 9501						
0291	X2	O		3750-678-6664	COLLAR ASSEMBLY	66289	VE542B	EA		1	*	*	*	*	*	15	14
0292	X2	O		2805-536-8835	CONTROL, GOVERNOR	66289	VE527W	EA		1	*	*	*	*	*	15	17
0293	X2	O			LEVER GOVERNOR CONTROL	66289	VB134C	EA		1	*	*	*	*	*	15	8
0294		O		5310-353-5895	NUT, SLEEVE: ADJUSTING	66289	PD173A	EA		1	*	*	*	*	*	15	7
0295		O		5315-839-2325	PIN, COTTER: CHAIN CONTROL, LEVER PIN SCREW PIN	66289	X1-1	EA		3	*	*	*	*	*	15	2
0296		O		5315-012-1224	PIN, COTTER: IN LEVER CHAIN END	66289	X1-7	EA		1	*	*	*	*	*	15	11
0297		O		5315-366-6291	PIN, STRAIGHT, HEADLESS: GOVERNOR CONTROL LEVER	66289	TC368A	EA		1	*	*	*	*	*	15	6
0298		O		5315-272-6827	PIN, STRAIGHT, THREADED: GOVERNOR ADJUSTING	66289	P1-115E	EA		1	*	*	*	*	*	15	3
0299	X2	O			RETAINER, SPRING	66289	PK121	EA		1	*	*	*	*	*	15	5
0300		O		5305-012-2159	SCREW, MACHINE: FOR COTTER PIN IN LEVER			EA		1	*	*	*	*	*	15	10
0301		O		5305-407-9163	SETSCREW: COLLAR STOP	66289	XE61	EA		1	*	*	*	*	*	15	13
0302	X2	O		2995-197-5863	SPRING, HELICAL, COMPRESSION: SCREW ADJUSTING	66289	PM111-1	EA		1	*	*	*	*	*	15	4
0303		O		5310-366-6294	WASHER, FLAT	66289	PH77	EA		1	*	*	*	*	*	15	9
0304	P	O	R	2990-732-1179	GOVERNOR ASSEMBLY	66289	T96DS1	EA		1	*	*	*	5	2	14	
0305	C	H		2990-366-6277	BUSHING, GOVERNOR GEAR	66289	TC389-1	EA		1	*	*	*	*	*	14	12
0306	C	H		5340-353-5960	CLEVIS, ROD END	66289	VB166	EA		1	*	*	*	*	*	14	3
0307	C	H		4730-692-8775	ELBOW, TUBE: GOVERNOR BODY TO OIL LINE	66289	RF270-4	EA		1	SEE GRP 0106						
0308	C	H		2990-677-1771	FLYWEIGHT ASSEMBLY: GOVERNOR	66289	TC322SD1	EA		2	*	*	*	*	*	14	9
0308A	X1			5315-663-1215	PIN, STRAIGHT, HEADED: FLYWEIGHT	66289	TC328D	EA		2						14	8
0309	X1			2805-527-7732	GASKET: GOVERNOR MTG (COMPONENT OF GASKET SET, STOCK NO. 2805-720-4773, SEE GROUP 0100)	66289	QD638A	EA		1						14	5
0310	C	H		2990-464-3619	GEAR, GOVERNOR: DRIVE	66289	GD100A1	EA		1	*	*	*	*	*	14	13
0311	C	H			HOUSING, GOVERNOR	66289	TC422B	EA		1	*	*	*	*	*	14	2
0312	C	H		5330-640-9612	PACKING, PREFORMED: CROSS SHAFT AND LEVER	66289	JK52	EA		1	*	*	*	*	*	14	16
0314		H		5315-141-1651	PIN, SPRING: TO GOVERNOR FLYWEIGHT	66289	PA340	EA		2	*	*	*	*	*	14	10

LINE NO.	(1) SOURCE, MAINT. AND RECOV. CODE (a) SOURCE	(b) MAINT.	(c) RECOV.	(2) FEDERAL STOCK NUMBER	(3) DESCRIPTION	MANUFACTURER'S CODE	MANUFACTURER'S PART NUMBER	(4) UNIT OF ISSUE	(5) QTY INC IN UNIT PACK	(6) QTY INC IN UNIT	(7) 30-DAY DS/GS MAINT. ALW. (a) 1-20	(b) 21-50	(c) 51-100	(8) 1-YR. ALW. PER. 100 EQUIP. CTYGCY. PLANNING	(9) DEPOT MAINT. ALW. PER. 100 EQUIP.	(10) ILLUSTRATION (a) FIG. NO.	(b) ITEM OR SYM. NO.
0315		H		5315-221-6005	PIN, TAPERED, PLAIN: GOVERNOR YOKE	66289	XH1	EA		1	*	*	*	*	*	14	4
0316	C	H		5340-276-5843	PLUG, EXPANSION: HOUSING	66289	SA52	EA		1	*	*	*	*	*	14	1
0317		O		4730-585-2359	PLUG, PIPE: GOVERNOR HOUSING	66289	PF18	EA		1	*	*	*	*	*	14	19
0318	C	H			SHAFT AND LEVER: CONTROL TO CARBURETOR	66289	TC428G	EA		1	*	*	*	*	*	14	15
0319	C	H		2990-657-4467	SLEEVE AND BEARING ASSEMBLY	66289	TC391B	EA		1	*	*	*	*	*	14	14
0320		H		5310-276-2821	WASHER, FLAT	66289	PH313A	EA		1	*	*	*	*	*	14	11
0321		O		5305-071-2237	SCREW, CAP, HEXAGON HEAD: GOVERNOR MTG			EA		2	*	*	*	*	*	14	7
0322		O		5305-068-0502	SCREW, CAP, HEXAGON HEAD: GOVERNOR MTG			EA		2	*	*	*	*	*	14	17
0323	X2	F		2990-603-4775	SHAFT, GOVERNOR DRIVE	66289	TC388-3S1	EA		1	*	*	*	*	*	8	2
0324	X2	F		5330-187-3635	PACKING, PREFORMED: GOVERNOR SHAFT	66289	JK55	EA		1	*	*	*	*	*	8	1
0325	X2	O		2990-739-9930	SPRING, GOVERNOR CONTROL	66289	PM75A	EA		1	*	*	*	*	*	15	1
0326		O		5310-543-2705	WASHER, LOCK: GOVERNOR MTG			EA		4	*	*	*	*	*	14	6
0335					0311 - ENGINE STARTING AIDS												
0336	X2	O		2910-776-7903	SHAFT ASSEMBLY, PRIMING	66289	TA126	EA		1	*	*	*	*	*	1	32
0337	X2	O		5330-542-1420	PACKING, PREFORMED: FUEL PUMP PRIMING SHAFT	66289	JK50	EA		1	*	*	*	*	*	1	31
0338																	
0338					0312 - THROTTLE OR CHOKE CONTROLS												
0339	X2	O		2990-294-6749	CONTROL ASSEMBLY, PUSH-PULL: CHOKE	66289	VE693	EA		1	*	*	*	*	*	15	16
0340		O		5310-010-7823	NUT, STAMPED: BUSHING RETAINER			EA		1	*	*	*	*	*	15	15
0341		O		5315-828-8190	PIN, COTTER: GOVERNOR CONTROL ROD TO CARBURETOR			EA		1	*	*	*	*	*	16	27
0342	X2	O			ROD, THROTTLE: CARBURETOR TO GOVERNOR	66298	VE555B	EA		1	*	*	*	*	*	16	25
0343					GROUP 04 - EXHAUST SYSTEM												
0343A					0401 - MUFFLER AND PIPES												
0344	X2	O			BRACKET, MUFFLER	82254	CFB40009	EA		1	*	*	*	*	*		
0345		O		5306-012-6078	BOLT, MACHINE: LOWER SUPPORT TO MUFFLER BRACKET			EA		2	*	*	*	*	*	17	8
0346	X2	O			CAP, SPRING: LOWER SUPPORT CLAMP TO MUFFLER BRACKET	82254	CFA32033	EA		4	*	*	*	*	*	17	9
0347	X1				CLAMP, SUPPORT: LOWER	82254	CFA40030	EA		1						17	17
0348	X1				CLAMP, SUPPORT: UPPER	82254	CFA40025	EA		1						17	1
0349		O		5310-584-5005	NUT, PLAIN, HEXAGON: UPPER CLAMP TO LOWER CLAMP			EA		2	*	*	*	*	*	17	14
0350		O		5310-045-1005	NUT, SELF-LOCKING, HEXAGON: LOWER SUPPORT TO MUFFLER BRACKET			EA		2	*	*	*	*	*	17	16
0351		O		5305-068-0500	SCREW, CAP, HEXAGON HEAD: UPPER CLAMP TO LOWER CLAMP			EA		2	*	*	*	*	*	17	2
0352	X2	O			SPRING, HELICAL, COMPRESSION: LOWER SUPPORT TO MUFFLER BRACKET	82254	CFA40008	EA		4	*	*	*	*	*	17	10

LINE NO.	(1) SOURCE, MAINT. AND RECOV. CODE (a) SOURCE	(b) MAINT.	(c) RECOV.	(2) FEDERAL STOCK NUMBER	(3) DESCRIPTION	MANUFACTURER'S CODE	MANUFACTURER'S PART NUMBER	(4) UNIT OF ISSUE	(5) QTY INC IN UNIT PACK	(6) QTY INC IN UNIT	(7) 30-DAY DS/GS MAINT. ALW. (a) 1-20	(b) 21-50	(c) 51-100	(8) 1-YR. ALW. PER. 100 EQUIP. CTY/GCY. PLANNING	(9) DEPOT MAINT. ALW. PER. 100 EQUIP.	(10) ILLUSTRATION (a) FIG. NO.	(b) ITEM OR SYM. NO.
0353	X1				SUPPORT, MUFFLER BRACKET	82254	CFA40027	EA		1						17	11
0354		0		5310-527-3289	WASHER, LOCK: UPPER CLAMP TO LOWER CLAMP			EA		2	*	*	*	*	*	17	15
0355		0		4730-221-3928	ELBOW, PIPE: EXHAUST PIPE TO MUFFLER			EA		1	*	*	*	*	*	17	4
0356	P	0		2990-141-9229	MUFFLER, EXHAUST	66289	WD41C	EA		1	*	*	2	10	20	17	3
0357		0		4730-278-3358	PLUG, PIPE: MUFFLER DRAIN			EA		1	*	*	*	*	*	17	18
0358	M	0			PIPE, EXHAUST	81336	A13200F5434	EA		1						17	5
0358A	P	0		4710-162-0991	MANUFACTURE FROM: PIPE, STEEL (14 IN. REQUIRED)			FT			SEE GRP 9501						
0359		0		5305-068-0502	SCREW, CAP, HEXAGON HEAD: MUFFLER SUPPORT TO CANOPY			EA		2	*	*	*	*	*	17	13
0360		0		5310-595-5599	WASHER, FLAT: SUPPORT TO CANOPY MTG			EA		2	*	*	*	*	*	17	12
0361					GROUP 05 - COOLING SYSTEM												
0361A					0502 - DEFLECTORS, SHROUDS												
0363	X2	0			CLIP, CABLE: SHIELD BOX TO AMMETER LEAD	82254	CFA40044	EA		1	*	*	*	*	*	4	9
0364	X2	0			COVER, AIR SHROUD	66289	SE13707	EA		1	*	*	*	*	*	18	3
0365	X2	0		2990-776-8106	DEFLECTOR, HEAT	66289	SE138	EA		1	*	*	*	*	*	18	6
0366	X2	0			SCREEN, FLYWHEEL	66289	SE32	EA		1	*	*	*	*	*	4	19
0367		0		5305-988-1723	SCREW, MACHINE: AIR SHROUD TO BLOCK	66289	XA34	EA		2	*	*	*	*	*	18	7
0368		0		5305-988-1726	SCREW, MACHINE: FLYWHEEL SCREEN MTG			EA		4	*	*	*	*	*	4	11
0369		0		5305-988-1721	SCREW, MACHINE: SHROUD MTG	66289	XA33	EA		11	*	*	*	*	*	18	2
0370		0		5305-988-1725	SCREW, MACHINE: SHROUD TO BLOCK	66289	XA36	EA		1	*	*	*	*	*	18	5
0371	X2	0			SHROUD, CYLINDER	66289	SE136D	EA		1	*	*	*	*	*	18	1
0373		0		5310-543-2705	WASHER, LOCK: FLYWHEEL SCREEN MTG			EA		4	*	*	*	*	*	4	10
0374		0		5310-261-7341	WASHER, LOCK: SHROUD MTG	66289	PE3	EA		13	*	*	*	*	*	18	4
0376					GROUP 06 - ELECTRICAL SYSTEM												
0376A					0601 - GENERATOR												
0377	X2	0			ARM, STABILIZER: GENERATOR ADJUSTING	82254	CFA40034	EA		1	*	*	*	*	*	19	26
0378	P	0		3030-528-4261	BELT, V: GENERATOR DRIVE	71956	4L250	EA		1	2	2	3	30	100	19	20
0379		0		5306-680-6004	BOLT, MACHINE: ADJUSTING ARM TO GENERATOR AND FRAME	96906	MS35291-32	EA		2	*	*	*	*	*	19	27
0380		0		5305-206-1071	BOLT, MACHINE: GENERATOR MTG	96906	MS35291-36	EA		2	*	*	*	*	*	19	1
0381	P	0	R	2920-861-1320	GENERATOR, BATTERY CHARGING (INCLUDES COMPONENTS OF REPAIR, STOCK NO. 2920-843-6741)	19728	GJP7404AT	EA		1	*	*	2	10	2	19	
0382	X1				ARMATURE, GENERATOR	19728	GJC3030FT	EA		1						19	9
0383	X1			3110-144-8505	BEARING, BALL, ANNULAR: ARMATURE SHAFT DRIVE END HEAD	19728	X295	EA		1						19	15

LINE NO.	(1) SOURCE, MAINT. AND RECOV. CODE (a) SOURCE	(b) MAINT.	(c) RECOV.	(2) FEDERAL STOCK NUMBER	(3) DESCRIPTION	MANUFACTURER'S CODE	MANUFACTURER'S PART NUMBER	(4) UNIT OF ISSUE	(5) QTY INC IN UNIT PACK	(6) QTY INC IN UNIT	(7) 30-DAY DS/GS MAINT. ALW. (a) 1-20	(b) 21-50	(c) 51-100	(8) 1-YR. ALW. PER. 100 EQUIP. CTYGCY. PLANNING	(9) DEPOT MAINT. ALW. PER. 100 EQUIP.	(10) ILLUSTRATION (a) FIG. NO.	(b) ITEM OR SYM. NO.
0384	X1				FAN, GENERATOR	19728	PU217B	EA		1						19	24
0385	X1				FRAME AND FIELD ASSEMBLY	19728	GJP2001D	EA		1							
0386	X1				ARM, BRUSH HOLDER	19728	GJC35A	EA		2						20	2
0387	X1				BOLT, THRU: DRIVE HEAD TO COMMUTATOR END MTG	19728	GY20C	EA		2						19	3
0388	X1				BUSHING: BRUSHOLDER STUD	19728	MDF25	EA		1							
0389	X1				FIELD AND COIL ASSEMBLY	19728	GJP1005D	EA		1							
0390	X1				COIL, FIELD: LEFT SIDE	19728	GJP1008B	EA		1							
0391	X1				COIL, FIELD: RIGHT SIDE	19278	GJP1007A	EA		1							
0392	X1				STUD, TERMINAL: FIELD	19728	GGU27A	EA		1							
0393	X1				HOLDER AND TERMINAL, POSITIVE	19728	GJC1034A	EA		1							
0394	X1				HOLDER, BRUSH: GROUND BRUSH	19728	GJC1033A	EA		1							
0395	X1				INSULATION, BRUSH HOLDER	19728	GJC39A	EA		1							
0396	X1			5970-353-7172	INSULATOR, BUSHING: FIBER, TERMINAL STUD	19728	GGU32	EA		1							
0397	X1				NUT, PLAIN, HEXAGON: FIELD TERMINAL STUD	19728	20X1377	EA		2							
0398	X1				NUT, PLAIN, HEXAGON: POSITIVE TERMINAL STUD	19728	20X1063	EA		2							
0399	X1				RIVET, BRUSH HOLDER BRACKET MOUNTING	19728	20X3389	EA		2							
0400	X1				RIVET: BRUSH HOLDER MTG	19728	20X3284	EA		1							
0401	X1			5305-012-2159	SCREW, MACHINE: BRUSH LEAD ATTACHING			EA		2						20	3
0402	X1			5305-272-4103	SCREW, MACHINE: POLE SHOE	19728	GK38D	EA		2							
0403	X1				SHIELD ASSEMBLY: FIELD TERMINAL	19728	XA928	EA		1							
0404	X1				SHIELD ASSEMBLY: POSITIVE BRUSH HOLDER TERMINAL	19728	XA929	EA		1							
0405	X1				WASHER, FLAT: TERMINAL STUD, BRASS	19728	SW634D	EA		1							
0406	X1			5310-013-8530	WASHER, LOCK: BRUSH LEAD ATTACHING	19728	12X195	EA		2						20	4
0407	X1			5310-209-4975	WASHER, LOCK: FIELD TERMINAL	19728	12X196	EA		2						19	18
0408	X1			5310-013-8542	WASHER, LOCK: POSITIVE TERMINAL STUD	19728	12X199	EA		2						19	4
0409	X1			5310-013-8542	WASHER, LOCK: THROUGH BOLT	19728	12X199	EA		2						19	4
0410	X1				WASHER, PLAIN: FIELD TERMINAL STUD, BRASS	19728	GGU31B	EA		1							
0411	X1				HEAD ASSEMBLY: COMMUTATOR END	19728	GJP2044A	EA		1						19	5
0412	X1				COVER, BEARING	19728	GJC49B	EA		1						19	31
0413	X1				OILER, COMMUTATOR END	19728	X3279A	EA		1						19	34
0414	X1			5315-248-0003	PIN, STRAIGHT, HEADLESS: COMMUTATOR END, HEAD ALIGNING	19728	MN21B	EA		1						19	6
0415	X1				RETAINER, OIL	19728	GAR75A	EA		1						19	35
0416	X1				WICK, OILER	19728	GJC46	EA		1						19	33
0417	X1				HEAD ASSEMBLY: DRIVE END	19728	GJP1102A	EA		1							
0418	X1				HEAD: DRIVE END	19728	GJP102A	EA		1						19	30
0419	X1				GASKET: BEARING RETAINER	19728	GEE27	EA		1						19	14
0420	X1			5315-248-0003	PIN, STRAIGHT, HEADLESS: HEAD, DRIVE END	19728	MN21B	EA		1						19	6

LINE NO.	(1) SOURCE, MAINT. AND RECOV. CODE (a) SOURCE	(b) MAINT.	(c) RECOV.	(2) FEDERAL STOCK NUMBER	(3) DESCRIPTION	MANUFACTURER'S CODE	MANUFACTURER'S PART NUMBER	(4) UNIT OF ISSUE	(5) QTY INC IN UNIT PACK	(6) QTY INC IN UNIT	(7) 30-DAY DS/GS MAINT. ALW. (a) 1-20	(b) 21-50	(c) 51-100	(8) 1-YR. ALW. PER. 100 EQUIP. CTY/GCY. PLANNING	(9) DEPOT MAINT. ALW. PER. 100 EQUIP.	(10) ILLUSTRATION (a) FIG. NO.	(b) ITEM OR SYM. NO.
0421	X1				RETAINER, BEARING	19728	GJC27B	EA		1						19	13
0422	X1			5310-030-2007	RETAINER, FELT	19728	GBM128	EA		1						19	16
0423	X1			5305-208-6244	SCREW, MACHINE: BEARING RETAINER CADMIUM OR ZINC CHROMATE	19728	GGW52	EA		3						19	19
0424	X1			5310-043-2226	WASHER, LOCK: BEARING RETAINER, CADMIUM OR ZINC CHROMATE			EA		3						19	18
0425	X1			5315-616-5526	KEY, WOODRUFF: GENERATOR PULLEY No. 5	19728	X260	EA		1						19	10
0426	X1			5310-358-7423	NUT, PLAIN, HEXAGON: ARMATURE SHAFT	19728	GBM21C	EA		1						19	21
0427	X1				OILER, DRIVE HEAD	19728	X489B	EA		1						19	29
0428	X1			2920-778-6315	PULLEY, GENERATOR DRIVE	19728	PU238A	EA		1						19	23
0429	X1			6105-925-4976	RETAINER, ARMATURE	19728	GR32B	EA		1						19	12
0430	X1				SPACER, FAN	19728	PU218A	EA		1						19	25
0431	X1			5310-582-6520	WASHER, LOCK: PULLEY MTG	19728	12X864	EA		1						19	22
0432		0		5310-045-1005	NUT, SELF-LOCKING, HEXAGON: GENERATOR MOUNTING	82254	CFR40744	EA		2	*	*	*	*	*	19	8
0433	P	F		2920-843-6741	REPAIR KIT, GENERATOR	81336	KIT19728-37	EA		1	2	2	4	50	50		
0434	X2	F		3120-774-4607	BEARING, BRONZE	19728	GJC38A	EA		1	*	*	*	*	*	19	32
0435	X1			5977-710-2044	BRUSH SET	19728	GJC2012[illegible]	EA		1						20	5
0436	X1			5340-282-5560	RING, RETAINING	19728	GAR171A	EA		1						19	11
0437	X1			5340-776-9921	SPRING, BRUSH	19728	GJC42A	EA		2						20	1
0438	X1			5330-143-5192	WASHER, NONMETALLIC	19728	GG164	EA		1						19	17
0439	X2	0			WASHER, CLAMP: GENERATOR TENSION ADJUSTING	82254	CFA40035	EA		1	*	*	*	*	*	19	28
0440	X2	0			WASHER, FLAT: GENERATOR MTG	82254	CFR40803	EA		1	*	*	*	*	*	19	7
0441		0		5310-639-8061	WASHER, LOCK: GENERATOR MTG			EA		4	*	*	*	*	*	19	2
0442					0602 - GENERATOR REGULATOR												
0443		0		5310-800-5282	NUT, PLAIN, HEXAGON: REGULATOR MTG	96906	MS35691-405	EA		2	*	*	*	*	*	26	17
0444	P	0		2920-785-6393	REGULATOR, VOLTAGE	19728	VB04201ET	EA		1	2	2	3	30	20	26	4
0445		0		5305-044-3507	SCREW, MACHINE: REGULATOR			EA		2	*	*	*	*	*	26	14
0446		0		5305-988-1725	SCREW, MACHINE: REGULATOR AND BOX MTG			EA		2	*	*	*	*	*	26	19
0447		0		5310-527-3289	WASHER, LOCK: REGULATOR MTG	96906	MS35333-23	EA		4	*	*	*	*	*	26	18
0448		0		5310-655-6314	WASHER, LOCK: REGULATOR MTG	66289	PE34A	EA		4	*	*	*	*	*	26	16
0449					0603 - STARTING MOTOR												
0450	X2	0			BRACKET, STARTER SUPPORT	66289	PG516A	EA		1	*	*	*	*	*	21	3
0451	X2	0			CABLE, ELECTRICAL: STARTER TO STARTER SWITCH	66289	YL292	EA		1	*	*	*	*	*	21	9
0452	P	0		1015-298-8702	GASKET: BRACKET MTG, COPPER			EA		2	*	2	2	20	10	21	2
0453	P	0	R	2920-555-6315	MOTOR ASSEMBLY, STARTING 12 VOLT (INCLUDES COMPONENTS OF PARTS KIT, STOCK No. 2920-710-6107)	19728	MBG402AT	EA		1	*	*	2	10	2	21	
0454	X1			2920-505-5108	ARMATURE, STARTER	19728	MZ2366T	EA		1						21	14

LINE NO.	(1) SOURCE, MAINT. AND RECOV. CODE (a) SOURCE	(b) MAINT.	(c) RECOV.	(2) FEDERAL STOCK NUMBER	(3) DESCRIPTION	MANUFACTURER'S CODE	MANUFACTURER'S PART NUMBER	(4) UNIT OF ISSUE	(5) QTY INC IN UNIT PACK	(6) QTY INC IN UNIT	(7) 30-DAY DS/GS MAINT. ALW. (a) 1-20	(b) 21-50	(c) 51-100	(8) 1-YR. ALW. PER. 100 EQUIP. CTYGCY. PLANNING	(9) DEPOT MAINT. ALW. PER. 100 EQUIP.	(10) ILLUSTRATION (a) FIG. NO.	(b) ITEM OR SYM. NO.
0455	X1			2920-353-7422	BAND, COVER ELECTRICAL BRUSH: STARTING MOTOR	19728	MZ1024AD	EA		1						21	11
0456	X1			2920-604-7773	BEARING, SLEEVE: INTERMEDIATE	19728	MZ1360A	EA		1						21	17
0457	X1			5305-353-7448	BOLT, MACHINE: PINION HOUSING	19728	MZ52B	EA		4						21	21
0458	X1			2920-547-4335	DRIVE, ENGINE, BENDIX	19728	EBB44A	EA		1							
0459	X1			5306-286-1491	BOLT, MACHINE	72850	F4618	EA		1						21	34
0460	X1			2920-035-8025	HEAD, DRIVE	72850	F4616	EA		1						21	31
0461	X1			5305-276-8264	SETSCREW: SPRING TO DRIVE HEAD MTG	72850	F4619	EA		1						21	33
0462	X1				SHAFT AND PINION ASSEMBLY	72850	F6745	EA		1						21	29
0463	X1			2920-182-8527	SLEEVE: SERVICE	72850	F4721	EA									
0464	X1			5340-664-9187	SPRING, HELICAL, TORSION: DRIVE	72850	F4855	EA		1						21	30
0465	X1			5310-282-0483	WASHER, KEY	72850	F4610	EA		2						21	32
0466	X1			2920-353-7425	END BELL, ELECTRICAL ROTATING EQUIPMENT: COMMUTATOR END	19728	MZ2002G	EA		1						21	4
0467	X1				FRAME AND FIELD ASSEMBLY	19728	MBG2042AS	EA		1						21	38
0468	X1			2920-604-7774	CAP, BEARING	19728	MZ358A	EA		1						21	24
0469	X1			5330-559-6862	GASKET: INTERNAL BEARING	19728	MZ359A	EA		1						21	18
0470	X1			2920-604-7776	HOUSING ASSEMBLY, PINION	19728	PS1330A	EA		1						21	23
0471	X1			5315-012-4546	KEY, WOODRUFF: DRIVE END, No. 6	19728	X261	EA		1						21	19
0472	X1			5310-208-6994	NUT, PLAIN, HEXAGON: TERMINAL STUD	19728	X180	EA		2						21	7
0473	X1			5310-012-0611	NUT, PLAIN, SQUARE: COVER BAND			EA		1						21	12
0474	X1			5305-276-7956	SCREW, MACHINE: COMMUTATOR END HEAD			EA		4						21	35
0475	X1			5305-428-4750	SCREW, MACHINE: COVER BAND	19728	X2882	EA		1						21	10
0476	X1			5305-206-8263	SCREW, MACHINE: INTERNAL BEARING CAP			EA		4							
0477	X1			5319-596-4745	WASHER, LOCK: NUT, TERMINAL STUD	19728	12X1014	EA		2						21	8
0478	X1			5310-043-2226	WASHER, LOCK: PINION HOUSING HEAD SCREW, COMMUTATOR END			EA		8						21	20
0479	X1			5310-701-6068	WASHER, SPRING TENSION	19728	MZ365	EA		1						21	15
0480	P	0		2920-710-6107	PARTS KIT, ELECTRICAL ENGINE STARTER	19728	KIT19728-36	EA		1	*	2	2	20	100		
0481	X1			2920-294-4115	BEARING, SLEEVE: PINION HOUSING BRONZE	19728	MZ364	EA		1						21	25
0482	X1			5977-696-0221	BRUSH SET	19728	MZ2012ES	EA		1							
0483	X1			5977-391-4031	BRUSH	19728	MZ12D	EA		2						21	6
0484	X1			5977-627-3579	BRUSH, GROUND	19728	MZ1034CS	EA		2						21	5
0485	X1			2920-143-5298	DISK, SOLID, PLAIN: COMMUTATOR END HEAD ASSEMBLY	19728	MAD110	EA		1						21	36
0486	X1			5330-508-1111	SEAL, PLAIN, ENCASED: PINION HOUSING	19728	XA832	EA		1						21	26
0487	X1			5977-695-7139	SPRING, SPIRAL, TORSION: BRUSH	19728	MZ19C	EA		4						21	37
0488	X1			5310-514-8416	WASHER, FLAT: INTERNAL	19728	MZ357	EA		2						21	16
0489	X1			5330-291-5921	WASHER, NONMETALLIC: COMMUTATOR END	19728	MU54F	EA		2						21	13
0490		0		5305-068-0502	SCREW, CAP, HEXAGON HEAD: BRACKET MTG			EA		2	*	*	*	*	*	21	1
0491		0		5305-269-2804	SCREW, CAP, HEXAGON HEAD: STARTER MTG			EA		3	*	*	*	*	*	21	28
0492	X2	0			WASHER, LOCK: STARTER MTG	66289	TE5	EA		3	*	*	*	*	*	21	27

LINE NO.	(1) SOURCE, MAINT. AND RECOV. CODE (a) SOURCE	(b) MAINT.	(c) RECOV.	(2) FEDERAL STOCK NUMBER	(3) DESCRIPTION	MANUFACTURER'S CODE	MANUFACTURER'S PART NUMBER	(4) UNIT OF ISSUE	(5) QTY INC IN UNIT PACK	(6) QTY INC IN UNIT	(7) 30-DAY DS/GS MAINT. ALW. (a) 1-20	(b) 21-50	(c) 51-100	(8) 1-YR. ALW. PER. 100 EQUIP. CTY/GCY. PLANNING	(9) DEPOT MAINT. ALW. PER. 100 EQUIP.	(10) ILLUSTRATION (a) FIG. NO.	(b) ITEM OR SYM. NO.
0565					0606 - ENGINE SAFETY CONTROLS												
0566	P	O		5930-797-9462	SWITCH, THERMOSTATIC: ENGINE SHUTOFF	66289	YC6659	EA		1	*	*	2	10	5	2	11
0567	M	O		2920-971-1451	WIRE, ASSEMBLY: IGNITION SWITCH TO TEMPERATURE SAFETY SWITCH	66289	YL226A	EA		1						23	4
					MANUFACTURE FROM:												
0567A		O		5940-323-1459	TERMINAL, LUG: WIRE ATTACHING TO IGNITION SWITCH			EA		1	*	*	*	*	*		
0567B	P	O		5940-323-1459	TERMINAL, LUG: WIRE ATTACHING, TO TEMPERATURE SAFETY SWITCH, No. 14-18 AWG WIRE SIZE	70903	7491	EA		1	*	*	2	10	10		
0567C	P	O		6145-164-7023	WIRE, ELECTRICAL (34 IN. REQUIRED)			FT		1	SEE GRP 950						
0568					0607 - INSTRUMENT OR ENGINE CONTROL PANEL												
0569	P	O		6625-252-5545	AMMETER	66289	YE2	EA		1	*	*	2	6	10	24	4
0570	X2	O			BOX, SWITCH, IGNITION	66289	YD69-3	EA		1	*	*	*	*	*	23	6
0571	X2	O			CABLE, SHIELD: STARTER SWITCH TO AMMETER	66289	YL177A	EA		1	*	*	*	*	*	24	5
0572	X2	O			COVER, SWITCH BOX	66289	SA74	EA		1	*	*	*	*	*	23	1
0573	X2	O		5325-539-7143	GROMMET, RUBBER			EA		1	*	*	*	*	*	23	5
0574	X2	O		5970-656-7524	INSULATION: SWITCH BOX COVER	66289	YD215	EA		1	*	*	*	*	*	23	2
0575	X2	O		2920-626-8302	LEAD ASSEMBLY, MAGNETO	66289	YD209	EA		1	*	*	*	*	*	23	3
0576		O		5310-584-5005	NUT, PLAIN, HEXAGON: STARTER SWITCH MTG			EA		2	*	*	*	*	*	24	6
0577		O		5310-012-0622	NUT, PLAIN, HEXAGON: SWITCH BOX MTG	66289	PD153-2	EA		2	*	*	*	*	*	23	8
0578	X2	O			PANEL, CONTROL	66289	VE566D1	EA		1	*	*	*	*	*	24	3
0579		O		5305-068-0502	SCREW, CAP, HEXAGON HEAD: STARTER SWITCH MTG			EA		2	*	*	*	*	*	24	8
0580		O		5305-276-7951	SCREW, MACHINE: SWITCH BOX MTG			EA		2	*	*	*	*	*	23	10
0581		O		5305-959-4159	SCREW, TAPPING, THREAD FORMING: CONTROL PANEL MTG			EA		3	*	*	*	*	*	24	1
0582	P	O		2920-876-8346	SWITCH, IGNITION: PUSH AND PULL	66289	YC9F	EA		1	*	*	2	10	3	23	9
0583	X2	O		2920-444-8605	SWITCH, STARTER	66289	YC10C	EA		1	*	*	*	*	*	24	7
0584		O		5310-428-2137	WASHER, LOCK: MAGNETO LEAD TO SWITCH ATTACHING	66289	PE72	EA		1	*	*	*	*	*	23	11
0585		O		5310-655-6314	WASHER, LOCK: STARTER SWITCH AND CONTROL PANEL MTG	66289	PE34A	EA		9	*	*	*	*	*	24	2
0586		O		5310-826-3773	WASHER, LOCK: SWITCH BOX MTG	66289	PE45A	EA		4	*	*	*	*	*	23	7
0587					0612 - BATTERIES, STORAGE												
0588	P	O		6140-057-2553	BATTERY, STORAGE: 6 CELL, 12v, 45 AMP	96906	MS35000-1	EA		1	*	*	*	*	*		
0589	X2	O			CABLE, BATTERY, NEGATIVE	77060	SL23	EA		1	*	*	*	*	*	25	4
0590	X2	O			CABLE, BATTERY, POSITIVE	77060	IT12	EA		1	*	*	*	*	*	25	1
0591	X2	O			CLAMP, BATTERY HOLD DOWN	82254	CFR40031	EA		1	*	*	*	*	*	25	5

LINE NO.	(1) SOURCE, MAINT. AND RECOV. CODE (a) SOURCE	(b) MAINT.	(c) RECOV.	(2) FEDERAL STOCK NUMBER	(3) DESCRIPTION	MANUFACTURER'S CODE	MANUFACTURER'S PART NUMBER	(4) UNIT OF ISSUE	(5) QTY INC IN UNIT PACK	(6) QTY INC IN UNIT	(7) 30-DAY DS/GS MAINT. ALW. (a) 1-20	(b) 21-50	(c) 51-100	(8) 1-YR. ALW. PER. 100 EQUIP. CTY OCCY. PLANNING	(9) DEPOT MAINT. ALW. PER. 100 EQUIP.	(10) ILLUSTRATION (a) FIG. NO.	(b) ITEM OR SYM. NO.
0592		0		5310-012-0377	NUT, PLAIN, HEXAGON: CLAMP MTG	96906	MS35690-602	EA		2	*	*	*	*	*	25	2
0593	P	0		6810-249-9354	SULFURIC ACID, ELECTROLYTE (AS REQUIRED)			GA			*	*	*	*	*		
0594		0		5310-595-7237	WASHER, LOCK: HOLD DOWN CLAMP MTG	96906	MS35333-42	EA		2	*	*	*	*	*	25	3
0595					0615 - RADIO INTERFERENCE SUPPRESSION												
0596	P	0		5910-127-7252	CAPACITOR: ARMATURE TERMINAL ON REGULATOR TO SHIELD BOX	81347	ESC8071CA445	EA		1	*	2	2	12	30	26	15
0597	M	0			LEAD, ELECTRICAL: AMMETER TO FEED THRU CAPACITOR	82254	CFA40041	EA		1						26	10
					MANUFACTURE FROM:												
0597A	P	0		2920-986-9691	TERMINAL, LUG			EA		2	SEE GRP 9501						
0597B	P	0		6145-164-7033	WIRE, ELECTRICAL (14 IN. REQUIRED)			FT			SEE GRP 9501						
0598	X2	0			LEAD ASSEMBLY, ELECTRICAL, SHIELDED: SHIELD BOX TO GENERATOR	95875	CLS3H0080-0132-3	EA		1	*	*	*	*	*	26	11
0599	X2	0			LEAD ASSEMBLY, ELECTRICAL, SHIELDED: SHIELD BOX TO GENERATOR	95875	CLS3H0080-0132-5	EA		1	*	*	*	*	*	26	12
0600	M	0			LEAD, ELECTRICAL: CAPACITOR TO ARMATURE TERMINAL ON VOLTAGE REGULATOR	82254	CFA40042	EA		1						26	22
					MANUFACTURE FROM:												
0600A	P	0		5940-321-9299	TERMINAL, LUG			EA		2	SEE GRP 9501						
0600B	P	0		6145-164-7033	WIRE, ELECTRICAL (6 IN. REQUIRED)			FT			SEE GRP 9501						
0601		0		5310-800-5282	NUT, PLAIN, HEXAGON: CAPACITOR MTG	96906	MS35691-405	EA		1	*	*	*	*	*	26	17
0602		0		5305-044-3507	SCREW, MACHINE: CAPACITOR MTG			EA		1	*	*	*	*	*	26	14
0603		0		5305-988-1725	SCREW, MACHINE: REGULATOR BOX MTG			EA		2	*	*	*	*	*	26	19
0604	X2	0		2920-627-0946	SHIELDING KIT: VOLTAGE REGULATOR	95875	C225	EA		1	*	*	*	*	*	26	
0605	X2	0		2920-654-3703	ADAPTER INSULATOR: BUSHING, LEAD ENTRANCE TO BOX	95875	3629	EA		2	*	*	*	*	*	26	13
0606	X1				BASE ASSEMBLY	95875	228	EA		1						26	6
0607	P	0		5910-677-5348	CAPACITOR ASSEMBLY: FEED THRU, FIXED, PAPER DIELECTRIC, 2 UF, 50 AMP, 100 VOLT, DC	95875	297	EA		1	2	2	2	12	30	26	7
0608	X1			2920-962-4598	COVER, SHIELDING BOX	95875	227	EA		1						26	1
0609	M	0		2920-986-9691	LEAD ASSEMBLY: REGULATOR TO FEED THRU CAPACITOR	95875	ELV3-0050-3	EA		1						26	5
					MANUFACTURE FROM:												
0609A	P	0		2920-986-9691	TERMINAL LUG			EA		2	SEE GRP 9501						
0609B	P	0		6145-295-0804	WIRE, ELECTRICAL (5 1/2 IN. REQUIRED)			FT			SEE GRP 9501						
0610	X2	0			NUT, LOCK: ADAPTER MTG	95875	3010A	EA		2	*	*	*	*	*	26	21
0611		0		5310-333-6117	NUT, PLAIN, HEXAGON: FEED THRU CAPACITOR MTG	95875	137	EA		4	*	*	*	*	*	26	20
0612		0		5305-012-0687	SCREW, MACHINE: COVER TO BOX MTG	95875	454	EA		4	*	*	*	*	*	26	2
0613		0		5305-013-1899	SCREW, MACHINE: FEED THRU CAPACITOR MOUNTING			EA		4	*	*	*	*	*	26	9
0614		0		5310-655-6314	WASHER, LOCK: CAPACITOR MTG	66289	PE34A	EA		2	*	*	*	*	*	26	16

LINE NO.	(1) SOURCE, MAINT. AND RECOV. CODE (a) SOURCE	(b) MAINT.	(c) RECOV.	(2) FEDERAL STOCK NUMBER	(3) DESCRIPTION	MANUFACTURER'S CODE	MANUFACTURER'S PART NUMBER	(4) UNIT OF ISSUE	(5) QTY INC IN UNIT PACK	(6) QTY INC IN UNIT	(7) 30-DAY DS/GS MAINT. ALW. (a) 1-20	(b) 21-50	(c) 51-100	(8) 1-YR. ALW. PER. 100 EQUIP. CTYCCY. PLANNING	(9) DEPOT MAINT. ALW. PER. 100 EQUIP.	(10) ILLUSTRATION (a) FIG. NO.	(b) ITEM OR SYM. NO.
0615		0		5310-527-3288	WASHER, LOCK: COVER TO BOX MTG	95875	616	EA		4	*	*	*	*	*	26	3
0616		0		5310-013-8526	WASHER, LOCK: FEED THRU CAPACITOR MTG	95875	617	EA		8	*	*	*	*	*	26	8
0617		0		5310-527-3289	WASHER, LOCK: REGULATOR BOX MTG	96906	MS35333-23	EA		2	*	*	*	*	*	26	18
0618					GROUP 15 - FRAME												
0618A					1501 - FRAME ASSEMBLY												
0619	X2	F			CHASSIS ASSEMBLY	82254	CFR40419	EA		1	*	*	*	*	*	27	
0620	X2	F			BOLT, EYE: LIFTING, 1/2-13 THD SIZE	82254	CFR40423	EA		1	*	*	*	*	*	28	20
0621	X2	F			BRACKET, CRANK BODY: SUPPORT FOR CRANK	82254	CFA40004	EA		1	*	*	*	*	*	4	15
0622	X1				CHASSIS, WELDMENT	82254	CFR40419-1	EA		1						27	8
0623	X2	F			RECEPTACLE: PANEL FASTENER, FRONT AND REAR	82254	CFR40421	EA		3	SEE GRP 9901					27	9
0624		F		5320-118-1759	RIVET, SOLID: FASTENER AND RECEPTACLE MTG	82254	CFR40422	EA		8	*	*	*	*	*	27	6
0625		F		5325-281-3993	STUD, SNAP FASTENER: CURTAIN HOLD DOWN	82254	CFR40420	EA		6	*	*	*	*	*	27	7
0626	X2	F			FASTENER: HOSE STRAP MTG	81336	D13200E5370-20	EA		1	*	*	*	*	*	27	5
0627		F		5305-068-0500	SCREW, CAP, HEXAGON HEAD: BRACKET MTG	96906	MS35291-3	EA		3	*	*	*	*	*	4	16
0628		F		5310-013-8542	WASHER, LOCK: BRACKET MTG	96906	MS35338-25	EA		3	*	*	*	*	*	4	10
0629					GROUP 18 - BODY, CAB, HOOD AND HULL												
0629A					1801 - BODY, CAB, HOOD												
0630	X2	0			CANOPY ASSEMBLY	81336	D13200E5402	EA		1	*	*	*	*	*	28	
0631	X2	0			DECK PLATE	81336	B13200E5417	EA		1	*	*	*	*	*	28	17
0632	X2	0			FLANGE, MUFFLER	81336	A13200E5427	EA		1	*	*	*	*	*	28	22
0633		0		5310-584-5005	NUT, PLAIN, HEXAGON: FLANGE MTG			EA		4	*	*	*	*	*	28	26
0634		0		5305-068-0502	SCREW, MACHINE: FLANGE MTG			EA		4	*	*	*	*	*	28	21
0635		0		5310-527-3289	WASHER, LOCK: FLANGE MTG			EA		4	*	*	*	*	*	28	25
0636	X2	0			PANEL, FRONT	81336	B13200E5413	EA		1	*	*	*	*	*	28	14
0637	X2	0			GROMMET, FRONT PANEL	81336	B13200E5413-5	EA		8	*	*	*	*	*	28	12
0638	X2	0			RETAINER, FRONT PANEL	81336	B13200E5413-6	EA		8	*	*	*	*	*	28	11
0639	X2	0			STUD, FRONT PANEL	81336	B13200E5413-4	EA		8	*	*	*	*	*	28	13
0640	X2	0			PANEL, REAR	81336	B13200E5415	EA		1	*	*	*	*	*	28	6
0641	X2	0			GROMMET, REAR PANEL	81336	B13200E5415-5	EA		8	*	*	*	*	*	28	4
0642	X2	0			RETAINER, REAR PANEL	81336	B13200E5415-6	EA		8	*	*	*	*	*	28	3
0643	X2	0			STUD, REAR PANEL	81336	B13200E5415-4	EA		8	*	*	*	*	*	28	5
0644	X2	0			RECEPTACLE: PANEL LATCHING	82254	CFR40421	EA		14	SEE GRP 9901					28	15
0645		0		5320-118-1759	RIVET, SOLID: RECEPTACLE MTG	82254	CFR40422	EA		28	*	*	*	*	*	28	16
0646	X2	0			STRAP, HOLD DOWN: ELBOW TO CANOPY MTG	81336	A13200E5423	EA		5	SEE GRP 1808						
0647	X2	0			STRAP, HOLD DOWN: ELBOW TO CANOPY MTG	81336	A13200E5424	EA		1	SEE GRP 1808						

LINE NO.	(1) SOURCE, MAINT AND RECOV. CODE (a) SOURCE	(b) MAINT.	(c) RECOV.	(2) FEDERAL STOCK NUMBER	(3) DESCRIPTION	MANUFACTURER'S CODE	MANUFACTURER'S PART NUMBER	(4) UNIT OF ISSUE	(5) QTY INC IN UNIT PACK	(6) QTY INC IN UNIT	(7) 30-DAY DS, GS MAINT. ALW. (a) 1-20	(b) 21-50	(c) 51-100	(8) 1-YR. ALW. PER. 100 EQUIP. CTY SCY. PLANNING	(9) DEPOT MAINT. ALW. PER. 100 EQUIP.	(10) ILLUSTRATION (a) FIG. NO.	(b) ITEM OR SYM. NO.
0648	X2	0			STRAP, HOLD DOWN: MANIFOLD SUPPORT	81336	A13200E5425-1	EA		1	SEE GRP 1808						
0649		0		5325-281-3993	STUD, SNAP, FASTENER: CURTAIN	82254	CFR40420	EA		18	*	*	*	*	*	28	10
0650		0		5305-639-8115	SCREW, CAP, HEXAGON HEAD: CANOPY TO FRAME			EA		8	*	*	*	*	*	28	9
0651		0		5305-012-0697	SCREW, MACHINE: CANOPY TO FRAME			EA		4	*	*	*	*	*		
0652					1808 - STRAPS												
0653	X2	0			STRAP, HOLD DOWN: ELBOW TO CANOPY MTG	81336	A13200E5422	EA		2	*	*	*	*	*	28	1
0654	X2	0			STRAP, HOLD DOWN: ELBOW TO CANOPY MTG	81336	A13200E5424	EA		1	*	*	*	*	*	28	19
0655	X2	0			STRAP, HOLD DOWN: MANIFOLD TO CANOPY	81336	A13200E5425-1	EA		1	*	*	*	*	*	28	2
0656					GROUP 22 - BODY, CHASSIS OR HULL, AND ACCESSORY ITEMS												
0656A					2201 - CANVAS ITEMS												
0657	X2	0			CURTAIN ASSEMBLY	81336	B13200E5421	EA		2	*	*	*	*	*	28	8
0658	M	0		9320-771-1512	SHIM: CURTAIN STRIP TO DECK PLATE			EA		2						28	23
					MANUFACTURE FROM:												
0658A	P	0		5330-505-6611	RUBBER SHEET, SOLID (16 IN. REQUIRED FOR EACH SHIM)			FT			SEE GRP 9501						
0659	M	0		9320-771-1513	SHIM: CURTAIN STRIP TO DECK PLATE	81336	B13200E45420-2	EA		4						28	24
					MANUFACTURE FROM:												
0659A	P	0		5330-505-6611	RUBBER SHEET, SOLID (9 IN. REQUIRED FOR EACH SHIM)			FT			SEE GRP 9501						
0660	M	0		3740-971-1418	STRIP, CURTAIN	81336	B13200E5419	EA		2						28	7
					MANUFACTURE FROM:												
0660A	P	0		9515-554-0893	STEEL, STRIP, CARBON, HOT ROLLED (3 FT 1 IN. REQUIRED FOR EACH STRIP)			FT			SEE GRP 9501						
0661		0		5310-584-5005	NUT, PLAIN, HEXAGON: CURTAIN MTG			EA		26	*	*	*	*	*	28	26
0662	X2	0			RECEPTACLE: CURTAIN HOLD DOWN STRAP	70655	7420	EA		13	*	*	*	*	*	28	18
0663		0		5320-118-1759	RIVET, SOLID: RECEPTACLE MTG			EA		26	*	*	*	*	*	28	16
0664		0		5305-068-0510	SCREW, CAP, HEXAGON HEAD: CURTAIN MTG			EA		26	*	*	*	*	*	28	9
0665		0		5310-527-3289	WASHER, LOCK: CURTAIN MTG	82254	CFR40288-5	EA		26	*	*	*	*	*	28	25
0666					2210 - DATA PLATES												
0667	X2	0			LABEL SET, IDENTIFICATION	81336	A13200E5402	EA		1	*	*	*	*	*		
0668	X2	0			PLATE, IDENTIFICATION: AIR PRESSURE VALVE	81336	D13200E5399-38	EA		1	*	*	*	*	*		
0669	X2	0			PLATE, IDENTIFICATION: BY-PASS	81336	D13200E5399-35	EA		2	*	*	*	*	*		
0670		F		5310-616-6949	NUT, PLAIN, HEXAGON: CORPS OF ENGINEERS PLATE MTG			EA		4	*	*	*	*	*		

LINE NO.	(1) SOURCE, MAINT. AND RECOV. CODE (a) SOURCE	(b) MAINT.	(c) RECOV.	(2) FEDERAL STOCK NUMBER	(3) DESCRIPTION	MANUFACTURER'S CODE	MANUFACTURER'S PART NUMBER	(4) UNIT OF ISSUE	(5) QTY INC IN UNIT PACK	(6) QTY INC IN UNIT	(7) 30-DAY DS/GS MAINT. ALW. (a) 1-20	(b) 21-50	(c) 51-100	(8) 1-YR. ALW. PER 100 EQUIP. CTY/GCY. PLANNING	(9) DEPOT MAINT. ALW. PER 100 EQUIP.	(10) ILLUSTRATION (a) FIG. NO.	(b) ITEM OR SYM. NO.
0671	X2	F		9905-807-3712	PLATE, IDENTIFICATION: CORPS OF ENGINEERS, TYPE A			EA		1	*	*	*	*	*		
0672	X2	0			PLATE, IDENTIFICATION: FLOW CONTROL	81336	D13200E5399-39	EA		1	*	*	*	*	*		
0673	X2	0			PLATE, IDENTIFICATION: INSECTICIDE PRESSURE	81336	D13200E5399-37	EA		1	*	*	*	*	*		
0674	X2	0			PLATE, IDENTIFICATION: INTAKE	81336	D13200E5399-36	EA		1	*	*	*	*	*		
0675	X2	0			PLATE, IDENTIFICATION: NOZZLE	81336	D13200E5399-34	EA		1	*	*	*	*	*		
0678	X2	0		2920-447-9295	PLATE, INSTRUCTION: ON AND OFF	66289	SD108	EA		1	*	*	*	*	*		
0679	X2	0			PLATE, NAME: BLOWER	01510	6459	EA		1	*	*	*	*	*		
0681		0		5320-117-7106	RIVET, SOLID: IDENTIFICATION PLATES MTG	81336	D13200E5399-40	EA		14	*	*	*	*	*		
0682	X2	0			SCREW, DRIVE: BLOWER NAMEPLATE MTG	01510	1120	EA		6	*	*	*	*	*		
0684		F		5305-010-0959	SCREW, MACHINE: CORPS OF ENGINEERS PLATE MOUNTING			EA		4	*	*	*	*	*		
0685		0			SCREW, TAPPING, THREAD CUTTING: PLATE MOUNTING	66289	XA67	EA		8	*	*	*	*	*		
0686		F		5310-316-8887	WASHER, LOCK: CORPS OF ENGINEERS PLATE MOUNTING			EA		4	*	*	*	*	*		
0687					GROUP 47 - GAGES (NON-ELECTRICAL), WEIGHING AND MEASURING DEVICES												
0687A					4702 - GAGES, LINES AND FITTINGS												
0688	M	0			BRACKET, HOSE CLIP			EA		1						21	22
0688A	P	0		9515-529-0429	MANUFACTURE FROM: STEEL STRIP, CARBON, HOT ROLLED (3/4 IN. REQUIRED)			FT			SEE GRP 9500						
0689	X2	0		6690-704-1862	FLOWMETER	22375	10A2235	EA		1	*	*	*	*	*		
0690	X1				BODY, METER	22375	322A035	EA		1						33	39
0691	X1				FITTING, INLET	22375	364D064	EA		1						33	71
0692	X1				FLOAT, OUT	22375	CFR40469	EA		1						33	34
0693		0		4730-044-4704	PLUG, PIPE: FLOWMETER BODY			EA		2	*	*	*	*	*	33	67
0694	X1				RING, O: INLET FITTING	22375	101A710	EA		1						33	70
0695	X1				RING, O: INLET FITTING	22375	101A923	EA		1						33	69
0696	X1			5330-806-7624	RING, O: INLET FITTING	22375	101A926	EA		1						33	68
0697	X1				RING, O: OUT ADAPTER	22375	101A714	EA		2						33	36
0698	X1				RING, OUT ADAPTING: BRASS	22375	376C032	EA		1						33	37
0699	X1				STOP, FLAT	22375	304A193	EA		1						33	35
0700	X1				TUBE, METER	22375	CFR40468	EA		1						33	38
0701	X2	0		6685-855-7226	GAGE, PRESSURE: SCALE MARK 0 TO 100	81336	D13200E5399-7	EA		1	*	*	*	*	*	33	65
0702	X2	0			MANOMETER	85274	1215-12	EA		1	*	*	*	*	*	33	41
0703	X1				CLIP, SCALE	85274	1216-13WM4	EA		1							
0704	X1				CLIP, SCALE	85274	1215-12WM6	EA		1							
0705	X1				PLUG, VALVE, RING	85274	1215-12WM1	EA		2							

LINE NO.	(1) SOURCE, MAINT. AND RECOV. CODE (a) SOURCE	(b) MAINT.	(c) RECOV.	(2) FEDERAL STOCK NUMBER	(3) DESCRIPTION	MANUFACTURER'S CODE	MANUFACTURER'S PART NUMBER	(4) UNIT OF ISSUE	(5) QTY INC IN UNIT PACK	(6) QTY INC IN UNIT	(7) 30-DAY DS/GS MAINT. ALW. (a) 1-20	(b) 21-50	(c) 51-100	(8) 1-YR. ALW. PER 100 EQUIP. CTYGCY. PLANNING	(9) DEPOT MAINT. ALW. PER 100 EQUIP.	(10) ILLUSTRATION (a) FIG. NO.	(b) ITEM OR SYM. NO.
0706	X1				SCALE	85274	1215-12WM5	EA		1							
0707	X1				TRAP, SAFETY	85274	1215-12WM2	EA		2							
0708	X1				WELL AND TUBE	85274	1215-12WM3	EA		1							
0709		0		5310-011-3102	NUT, PLAIN, HEXAGON: MANOMETER MTG			EA		1	*	*	*	*	*	33	10
0710		0		5310-012-0361	NUT, PLAIN, HEXAGON: MANOMETER MTG	96906	MS35650-102	EA		2	*	*	*	*	*	33	24
0711		0		5305-013-3648	SCREW, MACHINE: MANOMETER MTG	96906	MS35242-77	EA		2	*	*	*	*	*	33	40
0712		0		5305-043-6667	SCREW, MACHINE: MANOMETER MTG			EA		1	*	*	*	*	*	33	42
0713	M	0			TUBE: AIR PRESSURE LINE FROM PRESSURE VALVE TO MANOMETER	81336	D13200E5399-24	EA		1						33	25
0713A	P	0		4710-809-8149	MANUFACTURE FROM: PLASTIC TUBING (8 IN. REQUIRED)			FT			SEE GRP 9501						
0714	M	0		3740-971-1419	TUBE: MANOMETER VENT	81336	D13200E5399-23	EA		1						33	27
0714A	P	0		4710-809-8149	MANUFACTURE FROM: PLASTIC TUBING (2 1/2 IN. REQUIRED)			FT			SEE GRP 9501						
0715	X2	0			VALVE, NEEDLE: AIR PRESSURE, BOTH ENDS MALE, 1/8-27 THD SIZE	81336	D13200E5399-2	EA		1	*	*	*	*	*	33	62
0716		0		5310-527-3288	WASHER, LOCK: MANOMETER MTG	96906	MS35333-22	EA		2	*	*	*	*	*	33	26
0717		0		5310-595-7235	WASHER, LOCK: MANOMETER MTG	81336	MS35333-20	EA		1	*	*	*	*	*	33	9
0718					GROUP 55 - PUMPS												
0718A					5500 - PUMP ASSEMBLY												
0719	X2	F			CAP, PLUG	09058	213-1-782	EA		1	*	*	*	*	*	29	25
0720	X2	F			CAP, PUMP	09058	213-1-903-99	EA		1	*	*	*	*	*	29	29
0721	X2	F			DOWEL, HOUSING: CAP AND STAND LOCATING	09058	92-900-820	EA		4	*	*	*	*	*	29	33
0722		0		4730-084-0469	FITTING, LUBRICATION: CAP AND STAND	09058	92-5660-1348	EA		3	*	*	*	*	*	29	13
0723	P	F		2805-641-7404	GASKET: PLUG CAP	09058	466-3989	EA		1	SEE GRP 9901					29	26
0724	X2	F			HOUSING, PUMP	09058	213-10-202	EA		1	*	*	*	*	*	29	32
0725	X2	F			NUT, PLAIN, HEXAGON: CAP TO HOUSING MTG, STEEL CADMIUM OR ZINC PLATED, No. 12-32 THD SIZE	09058	213-1-187	EA		4	*	*	*	*	*	29	12
0726		0		5310-012-0377	NUT, PLAIN, HEXAGON: PUMP AND SHIM MTG	96906	MS35690-602	EA		4	*	*	*	*	*	29	23
0727		F		4730-044-4688	PLUG, PIPE: PUMP STAND			EA		2	*	*	*	*	*	29	19
0728	X2	0			PUMP ASSEMBLY, WATER	09058	820-6-305	EA		1	*	*	*	*	*	29	
0729		F		5305-055-6314	SCREW, CAP, HEXAGON HEAD: CAP TO HOUSING MOUNTING	09058	213-1-179	EA		6	*	*	*	*	*	29	40
0730		0		5305-012-2181	SCREW, CAP, HEXAGON HEAD: PUMP AND SHIM MOUNTING	96906	MS35291-66	EA		4	*	*	*	*	*	29	20
0731	X2	0			SHIM: PUMP MTG	81336	A13200E5431	EA		1	*	*	*	*	*	29	21
0732	X2	F			STAND, PUMP	09058	213-1-401-99	EA		1	*	*	*	*	*	29	14
0733		0		5310-595-7237	WASHER, LOCK: PUMP AND SHIM MTG	96906	MS35333-42	EA		4	*	*	*	*	*	29	22
0734					5501 - SHAFTS, ROTORS												
0735	X2	F		4320-918-9988	BUSHING, GEAR: DRIVE AND DRIVEN	09058	713-9001-107	EA		4	*	*	*	*	*	29	15
0736	X1				GEAR, DRIVE	09058	213-10-205-1	EA		1						29	16

LINE NO.	(1) SOURCE, MAINT. AND RECOV. CODE (a) SOURCE	(b) MAINT.	(c) RECOV.	(2) FEDERAL STOCK NUMBER	(3) DESCRIPTION	MANUFACTURER'S CODE	MANUFACTURER'S PART NUMBER	(4) UNIT OF ISSUE	(5) QTY INC IN UNIT PACK	(6) QTY INC IN UNIT	(7) 30-DAY DS/GS MAINT. ALW. (a) 1-20	(b) 21-50	(c) 51-100	(8) 1-YR. ALW. PER. 100 EQUIP. CTYSCY. PLANNING	(9) DEPOT MAINT. ALW. PER. 100 EQUIP.	(10) ILLUSTRATION (a) FIG. NO.	(b) ITEM OR STA. NO.
0737	X1				GEAR, DRIVEN	09058	213-10-206-1	EA		1						29	17
0738	X2	F		4320-972-8724	GEAR SET, PUMP	09058	713-9010-205	EA		1	*	*	*	*	*	29	18
0739	X2	F			GLAND, PACKING: DRIVE GEAR	09058	213-10-204	EA		1	*	*	*	*	*	29	5
0740	P	F		5330-793-1058	PACKING, PREFORMED: DRIVE GEAR	82254	CS440330	EA		1	2	2	3	30	30	29	7
0741	X2	F			RING, RETAINER: DRIVE GEAR	09058	429-66	EA		1	*	*	*	*	*	29	11
0742	X2	F			RING, SEAL: DRIVE GEAR	09058	213-10-214-1	EA		1	*	*	*	*	*	29	6
0743		F		5305-055-6313	SCREW, CAP, HEXAGON HEAD: GLAND TO STAND MOUNTING	09058	213-10-280	EA		2	*	*	*	*	*	29	4
0744	X2	F			SEAL, PACK CUP: DRIVE GEAR	09058	213-10-213-1	EA		1	*	*	*	*	*	29	8
0745	X2	F			SPRING, SEAL: DRIVE GEAR	09058	213-10-215	EA		1	*	*	*	*	*	29	9
0746	X2	F			STOP, SEAL: DRIVE GEAR	09058	213-10-216	EA		1	*	*	*	*	*	29	10
0747					5505 - SUCTION OR DISCHARGE SYSTEM												
0748	P	O		5330-793-1057	GASKET: RELIEF VALVE NUT	09058	466-3989	EA		1	SEE GRP 9904					29	26
0749	X2	O		4320-167-8216	PLUNGER, RELIEF VALVE	09058	213-1-786	EA		1	*	*	*	*	*	29	28
0750	X2	O			SCREW, ADJUSTING: RELIEF VALVE, W/NUT	09058	213-1-783	EA		1	*	*	*	*	*	29	24
0751	X2	O			SPRING, HELICAL, COMPRESSION: RELIEF PLUNGER	09058	92-1000-1240-18	EA		1	*	*	*	*	*	29	27
0752					5507 - PUMP DRIVE												
0753	P	O		3030-542-3702	BELT, V: PUMP DRIVE	71176	AP26	EA		1	2	2	3	30	100	29	39
0754		O		5306-207-9782	BOLT, MACHINE: BUSHING TO SHEAVE	66289	XD17	EA		3	*	*	*	*	*	29	38
0755	X2	O			BUSHING, DRIVE SHEAVE	71176	P19-16	EA		1	*	*	*	*	*	29	2
0756		F		5315-050-5654	KEY, MACHINE: DRIVE GEAR SHAFT TO SHEAVE BUSHING			EA		1	*	*	*	*	*	29	1
0757	X2	O			SHEAVE, PUMP DRIVE	71176	1TB52	EA		1	*	*	*	*	*	29	3
0758					GROUP 57 - SPRAY EQUIPMENT												
0758A					5703 - AIR BLOWER ASSEMBLY												
0759	X2	O			AIR BLOWER ASSEMBLY	01510	10-4009-409	EA		1	*	*	*	*	*		
0760	X2	H			BEARING, BALL: GEAR END	01510	11249	EA		3	*	*	*	*	*	31	8
0761	X2	H			BEARING, ROLLER: ROTOR SHAFT	01510	11248	EA		2	*	*	*	*	*	30	8
0762	P	O		3030-246-0152	BELT, V: BLOWER DRIVE, MATCHED SET OF 3	71176	BP60-3	EA		1	2	2	3	30	100	31	23
0763		H		5306-639-8060	BOLT, MACHINE: BEARING RETAINER	96906	MS35291-31	EA		8	*	*	*	*	*	31	10
0764		O		5306-207-9782	BOLT, MACHINE: BUSHING TO SHEAVE	66289	XD17	EA		3	*	*	*	*	*	31	22
0765		H		5306-576-0537	BOLT, MACHINE: END PLATE MTG			EA		14	*	*	*	*	*	30	11
0766		F		5306-021-7004	BOLT, MACHINE: GEAR END COVER MTG			EA		14	*	*	*	*	*	31	28
0767	X2	O			BREATHER ASSEMBLY, VENTILATION	01510	90247	EA		1	*	*	*	*	*		
0768	X1				BASE, BREATHER	01510	569021	EA		1						31	37
0769	X2	O			ELEMENT, BREATHER	01510	R16-16	EA		1	*	*	*	*	*	31	38
0770		O		5305-013-2768	SCREW, MACHINE: SHIELD TO BASE MTG			EA		1	*	*	*	*	*	31	41

LINE NO.	(1) SOURCE, MAINT. AND RECOV. CODE (a) SOURCE	(b) MAINT.	(c) RECOV.	(2) FEDERAL STOCK NUMBER	(3) DESCRIPTION	MANUFACTURER'S CODE	MANUFACTURER'S PART NUMBER	(4) UNIT OF ISSUE	(5) QTY INC IN UNIT PACK	(6) QTY INC IN UNIT	(7) 30-DAY DS/GS MAINT. ALW. (a) 1-20	(b) 21-50	(c) 51-100	(8) 1-YR. ALW. PER. 100 EQUIP. CTYGCY. PLANNING	(9) DEPOT MAINT. ALW. PER. 100 EQUIP.	(10) ILLUSTRATION (a) FIG. NO.	(b) ITEM OR SYM. NO.
0771	X1				SHIELD, BREATHER	01510	5687028	EA		1						31	39
0772		O		5310-013-8530	WASHER, LOCK: SHIELD TO BASE MTG			EA		1	*	*	*	*	*	31	40
0773	X2	O			BUSHING, PULLEY SHEAVE	71176	P1-1-1-8	EA		1	*	*	*	*	*	31	21
0774	X1				CAP, BEARING: FREE END PLATE	01510	11703	EA		1						30	4
0775	X1				COVER, GEAR END	01510	11701	EA		1						31	26
0776	X2	H			DOWEL, GEAR: LOCKPLATE AND SHIM ALIGNING	01510	6036	EA		2	*	*	*	*	*	31	13
0777	X2	O			FITTING, LUBRICATING: END PLATE	01510	90265	EA		2	*	*	*	*	*	30	13
0778	X2	O			FITTING, RELIEF	01510	90102	EA		2	*	*	*	*	*	30	3
0779	X2	F			GASKET: BEARING CAP, FREE END PLATE	01510	11705	EA		1	*	*	*	*	*	30	5
0780	X2	F			GASKET: GEAR END COVER	01510	11322	EA		1	*	*	*	*	*	31	31
0781	P	O		3740-542-3717	GASKET: INTAKE AND EXHAUST FLANGE	01510	7932	EA		2	2	3	5	60	30	30	28
0782	X2	H			GEAR ASSEMBLY: TIMING	01510	60169	EA		1	*	*	*	*	*	31	11
0783	X1				HOUSING, ROTOR	01510	11512	EA		1						30	32
0784	X2	H			KEY, GEAR: DRIVE GEAR AND DRIVEN GEAR, 1/4 IN. THK, 5/16 IN. WIDE, 7/8 IN. LONG	01510	11150	EA		2	*	*	*	*	*	30	19
0785		F		5315-050-5753	KEY, MACHINE: DRIVE SHAFT			EA		1	*	*	*	*	*	31	20
0786		H		5310-012-0279	NUT, PLAIN, HEXAGON: LOCK GEAR	01510	5871	EA		2	*	*	*	*	*	31	14
0787		H		5315-014-1244	PIN, STRAIGHT, HEADLESS: GEAR END COVER			EA		2	*	*	*	*	*	31	3
0788		H		5315-014-1242	PIN, STRAIGHT, HEADLESS: HOUSING			EA		4	*	*	*	*	*	30	27
0789	X1				PLATE, FREE END: BLOWER MTG	01510	11429R	EA		1						30	12
0790	X1				PLATE: GEAR END AND BLOWER MTG	01510	11772R	EA		1						31	1
0791	X2	F			PLATE, LOCK	01510	11739	EA		2	*	*	*	*	*	31	18
0792	X2	H			PLATE, LOCK: OIL RETAINER	01510	6038	EA		4	*	*	*	*	*	31	9
0793	X2	H			PLATE, LOCK: TIMING GEAR SCREW	01510	40325	EA		2	*	*	*	*	*	31	15
0794	X2	O			PLATE, NAME: BLOWER	01510	6459	EA		1	SEE GRP 2210						
0795	X2	O			PLUG, MAGNETIC: OIL DRAIN, STEEL, 3/8-18 THD SIZE	01510	90209	EA		1	*	*	*	*	*	31	27
0796		O		4730-044-4688	PLUG, PIPE: BEARING CAP			EA		2	*	*	*	*	*	30	10
0797		O		4730-044-4698	PLUG, PIPE: GEAR END PLATE			EA		6	*	*	*	*	*	31	5
0798		O		4730-044-5686	PLUG, PIPE: PLATE			EA		2	*	*	*	*	*	31	4
0799	X2	H			RETAINER, BEARING: GEAR END	01510	11140	EA		2	*	*	*	*	*	31	35
0800	X2	F			RING, BEARING RETAINER	01510	90259	EA		1	*	*	*	*	*	31	30
0801	X2	H			ROTOR, BLOWER	01510	11255	EA		2	*	*	*	*	*	30	18
0802		F		5305-543-2271	SCREW, CAP, HEXAGON HEAD: DRIVE SHAFT TO DRIVE GEAR			EA		4	*	*	*	*	*	31	19
0803		H		5305-018-1629	SCREW, CAP, HEXAGON HEAD: DRIVEN GEAR TO HUB			EA		4	*	*	*	*	*	31	16
0804	X2	O			SCREW, DRIVE: BLOWER NAMEPLATE MTG	01510	1120	EA		6	SEE GRP 2210						
0805		F		5305-013-3098	SCREW, MACHINE: BEARING CAP MTG			EA		8	*	*	*	*	*	30	1
0806		H		5305-042-0699	SCREW, MACHINE: TO ROTOR SHAFT			EA		2	*	*	*	*	*	30	6
0807	X2	F			SEAL: DRIVE SHAFT GEAR END COVER	01510	11600	EA		1	*	*	*	*	*	31	25
0808	X2	H			SEAL: ROTOR SHAFT	01510	11443	EA		2	*	*	*	*	*	30	9

LINE NO.	(1) SOURCE, MAINT. AND RECOV. CODE (a) SOURCE	(b) MAINT.	(c) RECOV.	(2) FEDERAL STOCK NUMBER	(3) DESCRIPTION	MANUFACTURER'S CODE	MANUFACTURER'S PART NUMBER	(4) UNIT OF ISSUE	(5) QTY INC IN UNIT PACK	(6) QTY INC IN UNIT	(7) 30-DAY DS/GS MAINT. ALW. (a) 1-20	(b) 21-50	(c) 51-100	(8) 1-YR. ALW. PER. 100 EQUIP. CTYGCY. PLANNING	(9) DEPOT MAINT. ALW. PER. 100 EQUIP.	(10) ILLUSTRATION (a) FIG. NO.	(b) ITEM OR SYM. NO.
0809	X2	H			SEAL: ROTOR SHAFT	01510	11443	EA		2	*	*	*	*	*	31	7
0810	X2	F			SHAFT, DRIVE	01510	11707	EA		1	*	*	*	*	*	31	17
0811	X2	O		3020-877-1194	PULLEY, THREE GROOVE: BLOWER DRIVE	71176	3TB60	EA		1	*	*	*	*	*	31	24
0812	X2	H			SHIM: TIMING GEAR, BRASS	01510	40357	EA		1	*	*	*	*	*	31	12
0813	X1				SPACER, DOWEL: PLATE GEAR	01510	10991	EA		2						31	2
0814	X1				SPACER, RETAINER RING	01510	8288	EA		2						31	6
0815		H		5310-637-9541	WASHER, LOCK: BEARING CAP, END PLATE DRIVE AND COVER MTG			EA		22	*	*	*	*	*	30	2
0816		H		5310-637-9541	WASHER, LOCK: COVER MTG			EA		14	*	*	*	*	*	31	29
0817	X2	H			WASHER, LOCK: GEAR	01510	5872	EA		2	*	*	*	*	*	31	36
0818	X2	H			WASHER, ROTOR SHAFT	01510	11778	EA		2	*	*	*	*	*	30	7
0819	X2	O			BRACKET, BELT TENSION: BLOWER ALIGNMENT AND BELT ADJUSTING	81336	C13200E5432	EA		1	*	*	*	*	*	30	17
0820		O		5310-584-5005	NUT, PLAIN, HEXAGON: BELT TENSION BRACKET	96906	MS135690-405	EA		2	*	*	*	*	*	30	16
0821		O		5305-637-4034	SCREW, CAP, HEXAGON HEAD: BELT TENSION BRACKET	96906	MS35291-13	EA		2	*	*	*	*	*	30	15
0831	X2	O			FLANGE: MANIFOLD MTG	81336	B13200E5355	EA		1	*	*	*	*	*	30	26
0832	X2	O			GUARD ASSEMBLY, BELT	81336	D13200E0109	EA		1	*	*	*	*	*	27	3
0833		O		5305-637-4028	SCREW, CAP, HEXAGON HEAD: BELT GUARD MTG	96906	MS35291-3	EA		6	*	*	*	*	*	27	1
0834		O		5305-639-8115	SCREW, CAP, HEXAGON HEAD: BELT GUARD MOUNTING			EA		1	*	*	*	*	*	27	4
0835		O		5310-011-5547	WASHER, LOCK: BELT GUARD MTG			EA		7	*	*	*	*	*	27	2
0836	X2	O			MANIFOLD ASSEMBLY, INTAKE	81336	C13200E5363	EA		1	*	*	*	*	*	30	31
0837		O		5310-012-0377	NUT, PLAIN, HEXAGON: BLOWER TO FRAME MOUNTING			EA		2	*	*	*	*	*	31	32
0838		O		5310-012-0377	NUT, PLAIN, HEAGON: BLOWER TO FRAME MOUNTING			EA		2	*	*	*	*	*	30	33
0839		O		5305-639-8118	SCREW, CAP, HEXAGON HEAD: BLOWER TO FRAME MTG			EA		2	*	*	*	*	*	31	34
0840		O		5305-639-8118	SCREW, CAP, HEXAGON HEAD: BLOWER TO FRAME MTG			EA		2	*	*	*	*	*	30	14
0841		O		5305-638-9082	SCREW, CAP, HEXAGON HEAD: FLANGE MANIFOLD MTG			EA		12	*	*	*	*	*	30	24
0842		O		5305-550-1310	SCREW, CAP, HEXAGON HEAD: INTAKE MANIFOLD MTG	96906	MS35291-60	EA		12	*	*	*	*	*	30	29
0843		O		5310-013-8542	WASHER, LOCK: BLOWER TO FRAME AND FLANGE TO HOUSING MTG	66289	PE80A	EA		16	*	*	*	*	*	30	25
0844		O		5310-013-8542	WASHER, LOCK: BLOWER TO FRAME MTG	66289	PE80A	EA		2	*	*	*	*	*	31	33
0845		O		5310-595-7237	WASHER, LOCK: INTAKE MANIFOLD MTG	96906	MS35333-42	EA		12	*	*	*	*	*	30	30
0855					5707 - INSTRUMENT PANEL												

LINE NO.	(1) SOURCE, MAINT. AND RECOV. CODE (a) SOURCE	(b) MAINT.	(c) RECOV.	(2) FEDERAL STOCK NUMBER	(3) DESCRIPTION	MANUFACTURER'S CODE	MANUFACTURER'S PART NUMBER	(4) UNIT OF ISSUE	(5) QTY INC IN UNIT PACK	(6) QTY INC IN UNIT	(7) 30-DAY DS, GS MAINT. ALW. (a) 1-20	(b) 21-50	(c) 51-100	(8) 1-YR. ALW. PER. 100 EQUIP. CTYCCY-PLANNING	(9) DEPOT MAINT. ALW. PER. 100 EQUIP.	(10) ILLUSTRATION (a) FIG. NO.	(b) ITEM OR SYM. NO.
0858	X2	0			PANEL ASSEMBLY, INSTRUMENT	81336	D200E5399	EA		1	*	*	*	*	*	33	
0859	X2	0			LABEL SET, IDENTIFICATION	81336	A13200E5402	EA		1	SEE GRP 2210						
0860	X2	0			MOUNT, VIBRATION: PANEL MTG	80124	60F40B	EA		5	*	*	*	*	*	33	8
0861	X1				PANEL, INSTRUMENT	82254	CFC40010	EA		1						33	7
0862		0		5320-117-7106	RIVET, SOLID: IDENTIFICATION PLATES MOUNTING			EA		14	SEE GRP 2210						
0863		0		5305-627-4028	SCREW, CAP, HEXAGON HEAD: BRACKET TO CANOPY	96906	MS35291-3	EA		1	*	*	*	*	*	33	31
0864		0		5310-527-3289	WASHER, LOCK: PANEL MTG AND BRACKET TO CANOPY			EA		11	*	*	*	*	*	33	6
0865					5708 - TANKS, VALVES, LINES, HOSES, FITTINGS, AND LIQUID STRAINER												
0866		0		4730-202-6694	BUSHING, PIPE: HOSE STRAINER, FLOW METER			EA		2	*	*	*	*	*	33	32
0867		0		4730-194-0219	BUSHING, PIPE: LINE STRAINER			EA		2	*	*	*	*	*	33	15
0868		0		4730-277-7899	BUSHING, PIPE: OUTLET LINE FROM LINE STRAINER			EA		1	*	*	*	*	*	33	17
0869		0		4730-277-7899	BUSHING, PIPE: PUMP TO UNION	81336	D13200E5499-16	EA		2	*	*	*	*	*	29	31
0870		0		4730-277-7051	BUSHING, PIPE: SPRAY LINE			EA		1	*	*	*	*	*	34	6
0871		0		4730-289-0147	BUSHING, PIPE: STRAINER TO HOSE CONNECTOR			EA		1	*	*	*	*	*	33	52
0872		0		4730-278-2538	CLAMP, HOSE: SUCTION HOSE	81336	D13200E5399-29	EA		2	*	*	*	*	*	33	45
0873	X2	0			CLIP, HOSE: LINE STRAINER TUBE SUPPORT	82254	CLA3171	EA		1	*	*	*	*	*	33	19
0874	X2	0		4820-845-1096	COCK, DRAIN: PUMP OUTLET LINE	81336	D13200E5430-4	EA		1	*	*	*	*	*	29	35
0875	X2	0			CONNECTOR, HOSE, PIPE: HOSE STRAINER AND INLET HOSE, BRASS, 3/8-18 THD SIZE ONE END, OTHER END 3/8 IN. ID HOSE	81336	D13200E5399-12	EA		2	*	*	*	*	*	33	53
0876	X2	0			CONNECTOR, HOSE, PIPE: PUMP TO CONTROL PANEL	81336	D13200E5399-20	EA		1	SEE GRP 9901					33	29
0877	X2	0			CONNECTOR, HOSE, PIPE: SPRAY LINE	81336	D13200E5399-20	EA		1	SEE GRP 9901					34	7
0878		0		4730-287-1614	COUPLING, PIPE: PRESSURE TUBE ELBOW TO EXHAUST FLANGE			EA		1	*	*	*	*	*	30	21
0879		0		4730-289-0587	COUPLING, PIPE: THREE WAY VALVE, BY-PASS			EA		3	*	*	*	*	*	33	2
0880	X2	0			CROSS, PIPE: SPRAY NOZZLE TUBES, BRASS, ALL ENDS MALE, 1/8-27 THD SIZE	81336	D13200E5341-4	EA		2	*	*	*	*	*	34	12
0881	X2	0			ELBOW, HOSE: PLASTIC HOSE CONNECTION	81336	D13200E5399-19	EA		1	SEE GRP 9901					29	37
0882	X2	0			ELBOW, HOSE: REAR OF PANEL, BY-PASS, THREE-WAY VALVE STRAINER	81336	D13200E5399-19	EA		4	SEE GRP 9901					33	1
0883		0		4730-277-5553	ELBOW, PIPE: AIR PRESSURE GAGE, TEE THREE-WAY VALVE			EA		4	*	*	*	*	*	33	59
0884		0		4730-249-3882	ELBOW, PIPE: AIR PRESSURE VALVE			EA		2	*	*	*	*	*	33	61
0885		0		4730-814-4132	ELBOW, PIPE TO TUBE: AIR PRESSURE LINE	30327	269P	EA		2	*	*	*	*	*	33	3

LINE NO.	(1) SOURCE, MAINT. AND RECOV. CODE (a) SOURCE	(b) MAINT.	(c) RECOV.	(2) FEDERAL STOCK NUMBER	(3) DESCRIPTION	MANUFACTURER'S CODE	MANUFACTURER'S PART NUMBER	(4) UNIT OF ISSUE	(5) QTY INC IN UNIT PACK	(6) QTY INC IN UNIT	(7) 30-DAY DS/GS MAINT. ALW. (a) 1-20	(b) 21-50	(c) 51-100	(8) 1-YR. ALW. PER. 100 EQUIP. CTYCCY. PLANNING	(9) DEPOT MAINT. ALW. PER. 100 EQUIP.	(10) ILLUSTRATION (a) FIG. NO.	(b) ITEM OR SYM. NO.
0886		0		4730-814-4132	ELBOW, PIPE TO TUBE: PRESSURE TUBE TO EXHAUST FLANGE	30327	269P	EA		1	*	*	*	*	*	30	20
0887	X2	0			ELBOW, PIPE TO TUBE: SPRAY NOZZLE, BRASS, ONE END FEMALE, 5/16-24 THD SIZE, OTHER END MALE, 1/8-27 THD SIZE	81336	D13200E5341-7	EA		2	*	*	*	*	*	34	19
0888		0		4730-814-4132	ELBOW, PIPE TO TUBE: SPRAY TO CROSS	30327	269P	EA		2	*	*	*	*	*	34	13
0889	X2	0			HOSE: BY-PASS TO SUPPLY TANK, PLASTIC, 10 FT LG	81336	D13200E5399-32	EA		1	*	*	*	*	*	33	72
0890	M	0			HOSE: INTAKE, SUCTION	81336	D13200E5399-31	EA		1						33	54
0890A	P	0		4730-289-4869	MANUFACTURE FROM: HOSE, RUBBER (10 FT REQUIRED)			FT			SEE GRP 9500						
0992		0		4730-014-4574	LOCKNUT, PIPE: AIR PRESSURE VALVE TO MANOMETER			EA		2	*	*	*	*	*	33	4
0993		0		4730-014-4574	LOCKNUT, PIPE: CLOSE NIPPLE TO SPRAY MANIFOLD			EA		2	*	*	*	*	*	34	18
0994		0		4730-014-4574	LOCKNUT, PIPE: NIPPLE LOCKING			EA		2	*	*	*	*	*	30	22
0995		0		4730-390-0138	LOCKNUT, PIPE: SUCTION HOSE CONNECTOR AT LINE STRAINER	30327	111B	EA		1	*	*	*	*	*	33	55
0996		0		4730-014-4575	LOCKNUT, PIPE: THREE-WAY VALVE, BY-PASS, FLOW CONTROL			EA		5	*	*	*	*	*	33	28
0997		0		4730-188-1854	NIPPLE, PIPE: FLOW CONTROL ELBOW			EA		1	*	*	*	*	*	33	56
0998		0		4730-196-1974	NIPPLE, PIPE: FLOW CONTROL VALVE TO TEE	82254	CFA40615	EA		1	*	*	*	*	*	33	66
0999		0		4730-293-3593	NIPPLE, PIPE: FLOW METER			EA		2	*	*	*	*	*	33	33
1000		0		4730-230-1996	NIPPLE, PIPE: PRESSURE TUBE ELBOW TO EXHAUST FLANGE			EA		1	*	*	*	*	*	30	23
1001		0		4730-230-1996	NIPPLE, PIPE: SPRAY MANIFOLD			EA		2	*	*	*	*	*	34	17
1002	X2	0			NIPPLE, PIPE: TEE TO BUSHING	81336	D13200E5399-13	EA		1	*	*	*	*	*	29	34
1003	X2	0			NIPPLE, PIPE: THREE WAY VALVE, 1/4-18 THD SIZE, 1 5/8 IN. LG, SPECIAL	82254	CFA40023	EA		2	*	*	*	*	*	33	60
1004		0		5305-276-7951	SCREW, MACHINE: TO HOSE CLIP			EA		1	*	*	*	*	*	33	20
1005	X2	0			STRAINER ASSEMBLY, HOSE	82254	CFR40587	EA		1	*	*	*	*	*		
1006	X1				BODY, STRAINER	82247	4652-2	EA		1						33	51
1007	X2	0			CAP, END	93146	4649	EA		1	*	*	*	*	*	33	47
1008	X2	0			SCREEN, STRAINER	82247	3910	EA		1	*	*	*	*	*	33	49
1009		0		5305-011-3975	SCREW, MACHINE: CAP TO BODY MTG			EA		1	*	*	*	*	*	33	46
1010	X2	0			SPRING, INNER	93146	4263	EA		1	*	*	*	*	*	33	50
1011	X2	0			SPRING, OUTER	93146	4296	EA		1	*	*	*	*	*	33	48
1012	X2	0			STRAINER ASSEMBLY, LINE	82247	A3-4ATWB	EA		1	*	*	*	*	*		
1013	X1				BODY, STRAINER	82247	5850	EA		1						33	16
1014	X2	0			CAP, STRAINER	82247	5851	EA		1	*	*	*	*	*	33	12
1015	X2	0			GASKET: STRAINER SCREEN TO BODY	82247	5852	EA		1	*	*	*	*	*	33	14
1016		0		4730-044-4693	PLUG, PIPE: STRAINER BODY CAP			EA		1	*	*	*	*	*	33	13
1017	X2	0			SCREEN, STRAINER	82247	4537A3-44TW	EA		1	*	*	*	*	*	33	11
1018		0		4730-278-4034	TEE, PIPE: FLOW CONTROL VALVE			EA		1	*	*	*	*	*	33	58
1019	X2	0			TEE, PIPE: PUMP OUTLET LINE	81336	D13200E5430-8	EA		1	*	*	*	*	*	29	36

LINE NO.	(1) SOURCE, MAINT. AND RECOV. CODE (a) SOURCE	(b) MAINT.	(c) RECOV.	(2) FEDERAL STOCK NUMBER	(3) DESCRIPTION	MANUFACTURER'S CODE	MANUFACTURER'S PART NUMBER	(4) UNIT OF ISSUE	(5) QTY INC IN UNIT PACK	(6) QTY INC IN UNIT	(7) 30-DAY DS/GS MAINT. ALW. (a) 1-20	(b) 21-50	(c) 51-100	(8) 1-YR. ALW. PER 100 EQUIP. CTYGCY. PLANNING	(9) DEPOT MAINT. ALW. PER. 100 EQUIP.	(10) ILLUSTRATION (a) FIG. NO.	(b) ITEM OR SYM. NO.
1020	X2	0			TEE, PIPE: SPRAY NOZZLE TUBE CONNECTION, BRASS, ONE END, MALE, 1/8-27 THD SIZE, OTHER ENDS, PLASTIC TUBE CONNECTION, 1/4 IN. OD TUBE, 5/16-24 THD SIZE	81336	D13200E5341-3	EA		4	*	*	*	*	*	34	14
1021	X2	0			TEE, PIPE TO TUBE: INSECTICIDE TUBE, BRASS, ONE END MALE, 1/8-27 THD SIZE, OTHER ENDS MALE, 5/16-24 THD SIZE	81336	D13200D5341-9	EA		1	*	*	*	*	*	34	5
1022	X2	0			TUBE ASSEMBLY: ELBOW TO SPRAY NOZZLE, TEFLON, 13 IN. LG	81336	D13200E5341-1	EA		10	*	*	*	*	*	34	15
1023	M	0			TUBE ASSEMBLY: INSECTICIDE	81336	D13200E5341-8	EA		2						34	9
					MANUFACTURE FROM:												
1023A		0		4730-278-8365	NUT, TUBE COUPLING			EA		2	*	*	*	*	*		
1023B		0		4730-278-8829	NUT, TUBE COUPLING			EA		2	*	*	*	*	*		
1023C	P	0		5330-362-1562	PACKING, PREFORMED			EA		2	*	*	2	8	5		
1023D	X2	0		4730-200-0273	SLEEVE, COMPRESSION			EA		2	*	*	*	*	*	34	8
1023E	P	0		4710-277-5526	TUBE, COPPER (10 3/4 IN. REQUIRED FOR EACH TUBE ASSEMBLY)			FT			SEE GRP 9501						
1024	X2	0			TUBE, FLUID: PUMP TO STRAINER AND PANEL, TEFLON, 3/8 IN. OD, 1/4 IN. ID, 3 FT 7 IN. LG	81336	D13200E5399-27	EA		2	*	*	*	*	*	33	18
1025	X2	0			TUBE, FLUID: THREE WAY VALVE TO SUPPLY BY-PASS TEFLON, 1/4 IN. ID, 3/8 IN. OD, 13 1/2 IN. LG	81336	D13200E5399-26	EA		1	*	*	*	*	*	33	22
1026	X2	0			TUBE, TEFLON: THREE-WAY VALVE TO MANIFOLD HEAD, 1/4 IN. ID, 3/8 IN. OD, 5 FT LG	81336	D13200E5399-25	EA		1	*	*	*	*	*	33	21
1027	M	0			TUBE, VINYL: AIR PRESSURE LINE FROM PRESSURE VALVE TO AIR BLOWER	81336	D13200E5399-23	EA		1						33	23
					MANUFACTURE FROM:												
1027A	P	0		4710-809-8149	PLASTIC, TUBING (22 IN. REQUIRED)			FT			SEE GRP 9501						
1028	X2	0			UNION, HALF: BY-PASS HOSE	81336	D13200E5399-11	EA		1	SEE GRP 9901					33	57
1029	X2	0			UNION, HALF: INLET LINE	81336	D13200E5399-11	EA		1	SEE GRP 9901					29	30
1030	X2	0			VALVE, NEEDLE: FLOW CONTROL, 1/4-18 THD SIZE	81336	D13200E5399-17	EA		1	*	*	*	*	*	33	44
1031		0		5310-012-0361	NUT, PLAIN, HEXAGON: WHEEL MTG			EA		1	*	*	*	*	*	33	24
1032	X1				WHEEL, FLOW VALVE	04959	STYLEFX1-3-4	EA		1						33	43
1033	X2	0			VALVE, THREE WAY: FLOW CONTROL, BRASS, 1/4-18 THD SIZE	81336	D13200E5399-5	EA		1	*	*	*	*	*	33	63
1034		0		5305-206-8263	SCREW, MACHINE: POINTER TO VALVE			EA		1	*	*	*	*	*	33	64

LINE NO.	(1) SOURCE, MAINT. AND RECOV. CODE (a) SOURCE	(b) MAINT.	(c) RECOV.	(2) FEDERAL STOCK NUMBER	(3) DESCRIPTION	MANUFACTURER'S CODE	MANUFACTURER'S PART NUMBER	(4) UNIT OF ISSUE	(5) QTY INC IN UNIT PACK	(6) QTY INC IN UNIT	(7) 30-DAY DS GS MAINT. ALW. (a) 1-20	(b) 21-50	(c) 51-100	(8) 1-YR. ALW. PER. 100 EQUIP. CTY GCY. PLANNING	(9) DEPOT MAINT. ALW. PER. 100 EQUIP.	(10) ILLUSTRATION (a) FIG. NO.	(b) ITEM OR SYM. NO.
1035					GROUP 95 - GENERAL USE STANDARDIZED PARTS												
1036					9501 - BULK MATERIAL												
1037	P	O		2990-085-9035	CHAIN, WELDLESS: PHOSPHATE FINISH, 0.062 IN. ID, 23 LINKS PER FIT	82254	CFR40829	FT			*	*	*	15	3		
1039	P	O		4720-289-4869	HOSE, RUBBER: 3/8 IN. ID, 50 FT LG (GE)			FT			*	*	*	15	3		
1040	P	O		4720-218-5644	HOSE, RUBBER: 1 1/2 IN. ID	66289	LL125	FT			*	*	*	15	3		
1041	P	O		5330-270-8469	PAPER, GASKET: 36 IN. W, 1/32 IN. THK			YD			*	*	*	5	1		
1042	P	O		4710-162-0991	PIPE, STEEL: 1 1/4 IN. ID	81336	A13200E5434	FT			*	*	*	25	5		
1043	P	O		4710-809-8149	PLASTIC TUBING: 1/4 IN. DIA	81326	D13200E5399-24	FT			*	*	*	125	25		
1044	P	O		5330-505-6611	RUBBER SHEET, SOLID: 1/16 IN. THK, 24 IN. W	81336	D13200E5420-1	FT			*	*	*	5	1		
1045	P	O		9515-554-0893	STEEL STRIP, CARBON, HOT ROLLED: 1/8 IN. THK, 1 1/4 IN. W	81336	D13200E5419	FT			*	*	*	5	1		
1046	P	O		9515-529-0429	STEEL STRIP, CARBON, HOT ROLLED: 1/8 IN. THK, 2 IN. W			FT			*	*	*	5	1		
1047	P	O		4710-277-5525	TUBE, COPPER: 0.250 IN. DIA			FT			*	*	*	50	10		
1048	P	O		4710-277-5526	TUBE, COPPER: 5/16 IN. DIA			FT			*	*	*	50	10		
1049	P	O		6145-295-0804	WIRE, ELECTRICAL: COPPER, TINNED FINISH, No. 12 AWG, 19 STRANDS OF No. 25 AWG, 0.155 IN. DIA			FT			*	*	*	50	10		
1050	P	O		6145-164-7033	WIRE, ELECTRICAL: COPPER, TINNED FINISH, No. 14 AWG, 19 STRANDS OF No. 27 AWG, 0.115 IN. DIA			FT			*	*	*	50	10		
1051	P	O		6145-164-7023	WIRE, ELECTRICAL: COPPER, TINNED FINISH, No. 16 AWG, 19 STRANDS, 0.102 IN. DIA	70903	1941	FT			*	*	*	50	10		
1052					GROUP 99 - PARTS PECULIAR												
1052A					9901 - MULTI-LISTED PARTS												
1053	X2	O			CONNECTOR, HOSE, PIPE: 3/8-24 THD SIZE ONE END OTHER END, 1/2-18 THD SIZE	81336	D13200E5399-20	EA		2	*	*	*	*	*		
1054	X2	O			ELBOW, HOSE: ONE END, 3/8-24 THD SIZE, OTHER END, 1/4-18 THD SIZE	81336	D13200E5399-19	EA		5	*	*	*	*	*		
1055	P	O		2805-641-7404	GASKET			EA		2	2	3	5	60	200		
1056	X2	F			RECEPTACLE	82254	CFR40421	EA		17	*	*	*	*	*		
1057	X2	O			UNION, HALF: BRASS, ONE END, 1/4-18 THD SIZE, OTHER END 3/8-24 THD SIZE	81336	D13200E5399-11	EA		2	*	*	*	*	*		

LINE NO.	(1) SOURCE, MAINT. AND RECOV. CODE (a) SOURCE	(b) MAINT.	(c) RECOV.	(2) FEDERAL STOCK NUMBER	(3) DESCRIPTION	MANUFACTURER'S CODE	MANUFACTURER'S PART NUMBER	(4) UNIT OF ISSUE	(5) QTY INC IN UNIT PACK	(6) QTY INC IN UNIT	(7) 30-DAY DS/GS MAINT. ALW. (a) 1-20	(b) 21-50	(c) 51-100	(8) 1-YR. ALW. PER. 100 EQUIP. CTYGCY. PLANNING	(9) DEPOT MAINT. ALW. PER. 100 EQUIP.	(10) ILLUSTRATION (a) FIG. NO.	(b) ITEM OR SYM. NO.
1058					PART II												
1058A					GROUP 01 - ENGINE												
1058B					0100 - ENGINE ASSEMBLY												
1059	X2	F			ENGINE, GASOLINE: WISCONSIN MODEL MTHD, SPECIFICATION No. 188809, 3 1/4 x 3 1/4 SIZE, 2 CYLINDER	66289	188809	EA		1	*	*	*	*	*		
1060		F		5305-527-4195	SCREW, CAP, HEXAGON HEAD: ENGINE MTG	96906	MS35291-115	EA		4	*	*	*	*	*	11	3
1061		F		5310-011-5551	WASHER, LOCK: ENGINE MTG SCREW			EA		4	*	*	*	*	*	11	4
1062					0101 - CRANKCASE, BLOCK, CYLINDER HEAD												
1063	X2	H	R		BLOCK ASSEMBLY, CYLINDER	66289	AA86A5S2	EA		1	*	*	*	*	*	6	4
1064	P	F		2805-309-8040	SEAT, VALVE	66289	HG227D	EA		4	SEE GRP 0105 PART I						
1065		O		5307-011-2572	STUD, PLAIN: MANIFOLD MTG	66289	PC110	EA		2	SEE GRP 0108 PART I						
1066					0102 - CRANKSHAFT												
1067	X2	O			SHEAVE, CRANKSHAFT: BLOWER DRIVE	82254	CFR40088	EA		1	*	*	*	*	*	4	4
1068					0105 - VALVES, CAMSHAFTS AND TIMING SYSTEM												
1068A	P	H		2805-339-5598	LIFTER, VALVE	66289	F63	EA		4	*	*	2	8	20	7	9
1069		H		5306-038-4416	SCREW, SELF-LOCKING: TAPPET ADJUSTING	66289	PB169A	EA		4	*	*	*	*	*	7	8
1070					0106 - ENGINE LUBRICATION SYSTEM												
1072		O		4730-278-4323	ADAPTER, STRAIGHT, PIPE TO TUBE: TEE TO GOVERNOR OIL LINE	66289	RF269	EA		1	*	*	*	*	*	10	16
1073		O		5306-543-4308	BOLT, MACHINE: FILTER MTG			EA		4	*	*	*	*	*	10	22
1074	X2	O			FILTER ASSEMBLY, OIL	73370	F3P	EA		1	*	*	*	*	*	10	
1075	X1				BODY ASSEMBLY	73370	8134	EA		1						10	20
1076	X2	O			COVER ASSEMBLY	73370	8113	EA		1	*	*	*	*	*	10	14
1077	X1				COVER, FILTER	73370	102033	EA		1						10	10
1078	X2	O		5330-056-9588	GASKET: FIBER	73370	102032	EA		1	*	*	*	*	*	10	9
1079	X1				HANDLE ASSEMBLY	73370	8112	EA		1						10	7
1080	X2	O			RING, SNAP	73370	102483	EA		1	*	*	*	*	*	10	11
1081	X2	O		5310-417-8620	WASHER, SHOULDERED	73370	10776	EA		1	*	*	*	*	*	10	13
1082	X2	O			SPRING, COMPRESSION	73370	10208	EA		1	*	*	*	*	*	10	12
1083	P	O		5330-298-0776	WASHER, NONMETALLIC: COVER SCREW	73370	10076	EA		1	*	2	2	15	100	10	8
1084	P	O		2940-529-2738	FILTER ELEMENT, FLUID, PRESSURE: OIL	73370	6946	EA		1	13	25	50	600	100	10	23

LINE NO.	(1) SOURCE, MAINT. AND RECOV. CODE (a) SOURCE	(b) MAINT.	(c) RECOV.	(2) FEDERAL STOCK NUMBER	(3) DESCRIPTION	MANUFACTURER'S CODE	MANUFACTURER'S PART NUMBER	(4) UNIT OF ISSUE	(5) QTY INC IN UNIT PACK	(6) QTY INC IN UNIT	(7) 30-DAY DS/GS MAINT. ALW. (a) 1-20	(b) 21-50	(c) 51-100	(8) 1-YR. ALW. PER. 100 EQUIP. CTYGCY-PLANNING	(9) DEPOT MAINT. ALW. PER. 100 EQUIP.	(10) ILLUSTRATION (a) FIG. NO.	(b) ITEM OR SYM. NO.
1085		0		5310-368-1908	NUT, PLAIN, SQUARE: OIL FILTER STRAP	73370	13446	EA		1	*	*	*	*	*	10	5
1086		0		5305-013-3083	SCREW, MACHINE: OIL FILTER STRAP	73370	12398	EA		1	*	*	*	*	*	10	21
1087	X2	0			STRAP, BODY	73370	10757	EA		1	*	*	*	*	*	10	3
1088		0		5310-368-1911	WASHER, LOCK: OIL FILTER STRAP	73370	10124	EA		1	*	*	*	*	*	10	4
1089	P	0		5330-291-3405	WASHER, NONMETALLIC: COVER	73370	10611	EA		1	13	25	50	600	100	10	6
1090	P	0		2940-606-6816	HOSE ASSEMBLY, RUBBER: OIL LINE, PRESSURE	66289	RM1299	EA		1	*	*	2	6	10	10	24
1091	M	0			LINE ASSEMBLY, OIL: CRANKCASE TO GOVERNOR	66289	RM796	EA		1						10	25
					MANUFACTURE FROM:												
1092		0		4730-011-6452	NUT, TUBE COUPLING	79470	1110X4	EA		2	*	*	*	*	*		
1092A	P	0		4710-277-5525	TUBE, COPPER (6 1/2 IN. REQUIRED)			FT			SEE GRP 9501						
1093		0		5310-176-8160	NUT, PLAIN HEXAGON: FILTER MTG			EA		4	*	*	*	*	*	10	1
1094		0		4730-603-4470	TEE, PIPE: OIL FILTER INLET	66289	RF1301	EA		1	*	*	*	*	*	10	15
1095		0		5310-596-4911	WASHER, LOCK: FILTER MTG	66289	PE4	EA		4	*	*	*	*	*	10	2
1096					GROUP 03 - FUEL SYSTEM												
1096A					0309 - FUEL FILTERS												
1097	X2	0		4730-639-9638	STRAINER ASSEMBLY	78480	OW480T	EA		1	*	*	*	*	*		
1098	X1				BAIL ASSEMBLY	78480	07766	EA		1						16	20
1099	P	0		2910-358-4317	BOWL, SEDIMENT, FUEL: GLASS	78480	07759	EA		1	2	2	3	30	10	16	19
1100	X1			2910-305-5749	COVER, STRAINER	78480	07770	EA		1						16	16
1101	P	0		2910-358-5327	SCREEN, FUEL STRAINER	78480	07762	EA		1	*	*	2	10	20	16	17
1102	X1			2910-368-6657	VALVE, FUEL REGULATING: SHUT OFF	78480	07769	EA		1						16	21
1103	P	0		2910-282-7557	WASHER, NONMETALLIC: BOWL MTG	78480	08227	EA		1	4	8	17	200	100	16	18
1104					GROUP 05 - COOLING SYSTEM												
1104A					0502 - DEFLECTORS, SHROUDS												
1105		F		5306-019-3988	BOLT, MACHINE: FLYWHEEL SHROUD MTG	66289	XD13	EA		3	*	*	*	*	*	18	10
1106	X2	F			SHROUD, FLYWHEEL	66289	SE135Y	EA		1	*	*	*	*	*	18	8
1107		F		5310-596-4911	WASHER, LOCK: FLYWHEEL SHROUD MTG	66289	PE4	EA		3	*	*	*	*	*	18	9
1108					GROUP 06 - ELECTRICAL SYSTEM												
1108A					0605 - IGNITION COMPONENTS												
1109	P	0		2920-566-7806	CABLE, SPECIAL PURPOSE	66289	YD212D	EA		2	*	*	2	10	10	2	4
1110	X2	0		5340-447-9222	CLAMP, CABLE: SPARK PLUG WIRES	66289	PG314	EA		1	*	*	*	*	*	2	1
1111	P	0	R	2920-800-8156	MAGNETO ASSEMBLY (INCLUDES COMPONENTS OF REPAIR KIT, STOCK NO. 2920-712-1267)	79575	XHS2484	EA		1	*	*	2	10	2	22	
1112	X1			2930-353-6609	BEARING, SLEEVE: DRIVE CUP	79575	5518	EA		1						22	4

LINE NO.	(1) SOURCE, MAINT. AND RECOV. CODE (a) SOURCE	(b) MAINT.	(c) RECOV.	(2) FEDERAL STOCK NUMBER	(3) DESCRIPTION	MANUFACTURER'S CODE	MANUFACTURER'S PART NUMBER	(4) UNIT OF ISSUE	(5) QTY INC IN UNIT PACK	(6) QTY INC IN UNIT	(7) 30-DAY DS/GS MAINT. ALW. (a) 1-20	(b) 21-50	(c) 51-100	(8) 1-YR. ALW. PER. 100 EQUIP. CTYGCY. PLANNING	(9) DEPOT MAINT. ALW. PER. 100 EQUIP.	(10) ILLUSTRATION (a) FIG. NO.	(b) ITEM OR SYM. NO.
1113	X1			2920-374-3481	BEARING UNIT, BALL, CYLINDRICAL CARTRIDGE: ROTOR SHAFT	79575	X7672	EA		1							
1114	X1			3110-144-8882	BEARING, BALL ANNULAR: ROTOR	79575	7617	EA		1						22	6
1115	X1			2920-353-6611	RETAINER, BALL BEARING	79575	5567	EA		1						22	5
1116	X1				BRACKET, TERMINAL	79575	X7724	EA		1						22	57
1117	X1			2920-367-7985	CLAMP, ELECTRICAL: COIL CORE	79575	5633	EA		2						22	19
1118	X1			2920-335-4178	COIL, MAGNETO	79575	X7895	EA		1						22	21
1119	X1			4920-428-3751	CORE ASSEMBLY: MAGNETO COIL	79575	X5524	EA		1						22	22
1120	X1			2920-607-1324	COUPLING, MAGNETO: IMPULSE	79575	X8774	EA		1							
1121	X1			2920-366-6296	ARM, TRIP	79575	A179X	EA		1						22	33
1122	X1			2920-368-6715	CUP, MAGNETO DRIVE	79575	2061A	EA		1						22	26
1123	X1			2920-740-2845	FLANGE, DRIVEN GROUP	79575	X6586	EA		1						22	35
1124	X1				NUT, IMPULSE LOCK	79575	8739	EA		1						22	28
1125	X1			2920-366-6306	RETAINER, DRIVE SPRING	79575	2288	EA		1						22	31
1126	X1			2920-367-7999	RING, LOCK: RETAINING, IMPULSE COUPLING	79575	6424	EA		1						22	24
1127	X1			2920-662-9135	SPACER, DRIVE FLANGE	79575	2122	EA		1						22	34
1128	X1			5340-353-6606	SPRING, SPIRAL, TENSION: IMPULSE COUPLING	79575	15-186	EA		1						22	27
1129	X1			5340-740-2871	SPRING, TRIP ARM	79575	6585	EA		1						22	32
1130	X1			2920-740-2846	WASHER: DRIVE CUP SPACER	79575	7908	EA		1						22	29
1131	X1			5310-187-3458	WASHER, FLAT: DRIVE FLANGE	79575	M42XA	EA		1						22	30
1132	X1			5310-353-6620	WASHER, KEY	79575	6425	EA		1						22	25
1133	X1			2920-787-0480	COVER, UNIT	79575	X7910	EA		1						22	16
1134	X1				ROD GROUP, GROUND	79575	X7867	EA		1						22	48
1135	X1			2920-598-9432	SPRING, HELICAL, COMPRESSION	79575	6732	EA		2						22	50
1136	X1			5305-276-7951	SCREW, MACHINE: TERMINAL BLOCK MTG			EA		3						22	13
1137	X1			5940-314-0255	TERMINAL BLOCK: HIGH TENSION	79575	X7892	EA		1						22	15
1138	X1			5310-013-5830	WASHER, LOCK: TERMINAL BLOCK MTG			EA		3						22	14
1139	X1			8305-740-2859	FELT, STRIP: BREAKER ARM	79575	7644	EA		1						22	58
1140	X1			5330-297-4578	GASKET: IMPULSE STOP	79575	5519	EA		1						22	42
1141	X1			2920-360-8381	GASKET: MAGNETO MTG (COMPONENT OF GASKET SET, STOCK NO. 2805-720-4773, SEE GROUP 0100 PART 1) (CAN BE MANUFACTURED FROM PAPER, STOCK NO. 5330-233-5846)	66289	QD616	EA		1						22	3
1142	X1				GEAR, DRIVE	79575	6957	EA		1						22	23
1143	X1				HOUSING, MAIN: MAGNETO	79575	X8598	EA		1						22	11
1144	X1				LEAD, ELECTRICAL: BREAKER TO CAPACITOR	79575	X7872	EA		1						22	55
1145	X1			5310-012-0614	NUT, PLAIN, HEXAGON: IMPULSE STOP SET SCREW LOCKING			EA		1						22	38
1146	X1			2510-039-7699	PLATE, IMPULSE STOP	79575	X8555	EA		1						22	37
1147	X1				PLATE, NAME: MAGNETO	79575	8792	EA		1	SEE GRP 2210						
1148	X1			2920-740-2873	ROTOR	79575	Y7569	EA		1						22	10
1149	X1			5305-281-8308	SCREW, ASSEMBLED WASHER: BREAKER CLAMP, CONTACT MTG, CORE CLAMP MTG	79575	5411	EA		4						22	20

LINE NO.	(1) SOURCE, MAINT. AND RECOV. CODE (a) SOURCE	(b) MAINT.	(c) RECOV.	(2) FEDERAL STOCK NUMBER	(3) DESCRIPTION	MANUFACTURER'S CODE	MANUFACTURER'S PART NUMBER	(4) UNIT OF ISSUE	(5) QTY INC IN UNIT PACK	(6) QTY INC IN UNIT	(7) 30-DAY DS/GS MAINT. ALW. (a) 1-20	(b) 21-50	(c) 51-100	(8) 1-YR. ALW. PER. 100 EQUIP. CTY/GCY. PLANNING	(9) DEPOT MAINT. ALW. PER. 100 EQUIP.	(10) ILLUSTRATION (a) FIG. NO.	(b) ITEM OR SYM. NO.
1150	X1			5305-639-6026	SCREW, ASSEMBLED WASHER: TERMINAL BRACKET MTG	79575	5900	EA		1						22	56
1151	X1			5305-335-4180	SCREW, DRIVE: NAMEPLATE MTG	79575	5250	EA		2	SEE GRP 2210						
1152	X1			5305-424-2999	SCREW, MACHINE: COVER MTG	79575	5622	EA		3						22	18
1153	X1			5305-022-5561	SCREW, MACHINE: IMPULSE STOP CLAMP	79575	6465	EA		4						22	41
1154	X1			5305-638-6834	SETSCREW: IMPULSE STOP			EA		1						22	39
1155	X1			2920-353-6614	SHIELD, BALL BEARING	79575	5926	EA		1						22	8
1156	X1			2920-353-6610	SPACER, SLEEVE: BEARING GAGE	79575	5520	EA		1						22	9
1157	X1			5310-275-1353	WASHER: COVER MTG	79575	1XA256	EA		3						22	17
1158	X1			5310-188-4185	WASHER, FLAT: BREAKER ARM PIVOT	79575	3219	EA		1						22	52
1159	X1			5310-351-0698	WASHER, FLAT: BREAKER POINT ALIGNING	79575	5717	EA		1						22	59
1160	X1				WASHER, FLAT: POINT ALIGNMENT STEEL, CADMIUM OR ZINC PLATED, 3/16 ID, 5/16 OD, 0.004 IN. THK	66289	10407	EA		1						22	51
1161	X1			5310-012-1744	WASHER, LOCK: IMPULSE STOP CLAMP			EA		4						22	40
1162	X1			5330-262-3306	WICK: CAM WIPER, FELT	79575	6984	EA		1						22	54
1163		0		5310-012-0377	NUT, PLAIN, HEXAGON: MAGNETO MTG			EA		1	*	*	*	*	*	22	44
1164	P	0		2920-712-1267	REPAIR KIT, MAGNETO	81336	79575-4	EA		1	2	3	5	60	2	22	
1165	X1			2920-662-9133	BEARING, SLEEVE: BREAKER PLATE	79575	5610	EA		1						22	46
1166	X1			5910-740-2855	CONDENSER, CAP	79575	X7720	EA		1						22	49
1167	X1			2920-740-2882	CONTACT SET, DISTRIBUTOR	79575	X8551	EA		1						22	47
1168	X1			2920-428-3830	DEFLECTOR, DIRT AND OIL	79575	6204	EA		1						22	36
1169	X1			2920-740-2852	GASKET: COVER, LEAD	79575	7871	EA		1						22	12
1170	X1			5315-367-7994	PIN, LOCK: BREAKER ARM	79575	4210	EA		1						22	53
1171	X1			5340-281-6688	RING, RETAINING: ROTARY BEARINGS	79575	5516	EA		1						22	7
1172	X1			2920-353-6618	SEAL, PLAIN: OIL	79575	6199	EA		1						22	43
1173		0		5305-269-3217	SCREW, CAP, HEXAGON HEAD: MAGNETO MTG			EA		2	*	*	*	*	*	22	1
1174		0		5305-584-8736	SCREW, MACHINE: CABLE CLAMP ATTACHMENT	66289	XA33	EA		1	*	*	*	*	*	2	3
1175	P	0		2920-293-5212	SPARK PLUG: 18 MM	11583	XED16	EA		2	5	10	20	240	200	2	6
1176	P	0		5330-599-5356	GASKET: SPARK PLUG	11583	A676	EA		2	2	3	5	60	200	2	5
1177		0		5310-543-2705	WASHER, LOCK: CABLE CLAMP ATTACHMENT			EA		1	*	*	*	*	*	2	2
1178		0		5310-582-9930	WASHER, LOCK: MAGNETO MTG	66289	PE76A	EA		2	*	*	*	*	*	22	2
1179		0		5310-627-6128	WASHER, LOCK: MAGNETO MTG	66289	PE56A	EA		1	*	*	*	*	*	22	45
1180					GROUP 22 - BODY CHASSIS OR HULL AND ACCESSORY ITEMS												
1180A					2210 - DATA PLATES												
1181	X2	0		2805-685-6019	PLATE, INSTRUCTION: ENGINE OPERATION	66289	SD153	EA		1	*	*	*	*	*		
1182	X2	0			PLATE, INSTRUCTION: MILITARY STANDARD PARTS	66289	SD197A	EA		1	*	*	*	*	*		
1183	X2	0			PLATE, NAME: MAGNETO	79575	8792	EA		1	*	*	*	*	*		
1184		0		5305-335-4180	SCREW, DRIVE: NAMEPLATE MTG	79575	5250	EA		2	*	*	*	*	*		

LINE NO.	(1) SOURCE, MAINT. AND RECOV. CODE (a) SOURCE	(b) MAINT.	(c) RECOV.	(2) FEDERAL STOCK NUMBER	(3) DESCRIPTION	MANUFACTURER'S CODE	MANUFACTURER'S PART NUMBER	(4) UNIT OF ISSUE	(5) QTY INC IN UNIT PACK	(6) QTY INC IN UNIT	(7) 30-DAY DS/GS MAINT. ALW. (a) 1-20	(b) 21-50	(c) 51-100	(8) 1-YR. ALW. PER. 100 EQUIP. CTY-GCY. PLANNING	(9) DEPOT MAINT. ALW. PER. 100 EQUIP.	(10) ILLUSTRATION (a) FIG. NO.	(b) ITEM OR SYM. NO.
1185					GROUP 57 - SPRAY EQUIPMENT COMPONENTS												
1185A					5703 - AIR BLOWER ASSEMBLY												
1186	X2	0			FILTER, SILENCER: AIR BLOWER	00736	BW8GS	EA		1	*	*	*	*	*	32	
1187	X1				BODY, FILTER	00736	BW8GS825	EA		1						32	5
1188	X2	0			ELEMENT, FILTER SILENCER	00736	BW8-826	EA		1	*	*	*	*	*	32	6
1189	P	0		3740-542-3716	GASKET: ELEMENT TO BODY AND TOP	00736	10M06	EA		2	*	2	2	20	10	32	4
1190		0		5310-010-3129	NUT, PLAIN, WING: TOP TO BODY	00736	39SYZ20	EA		1	*	*	*	*	*	32	1
1191	X2	0			TOP ASSEMBLY	00736	BW8-800	EA		1	*	*	*	*	*	32	8
1192	M	0			FELT: TOP ASSEMBLY	00736	540-16	EA		1						32	7
					MANUFACTURE FROM:												
1192A	P	0		5330-191-1096	FELT SHEET (7 IN. X 7 IN. REQUIRED)			SH			SEE GRP 9501						
1193		0		5310-366-6294	WASHER, FLAT: TOP TO BODY			EA		1	*	*	*	*	*	32	3
1194		0		5310-013-8542	WASHER, LOCK: TOP TO BODY	66289	PE80A	EA		1	*	*	*	*	*	32	2
1195					5704 - SPRAY DUCTS AND MANIFOLDS												
1196	X2	0			MANIFOLD SPRAY ASSEMBLY	81336	D13200E5341	EA		1	*	*	*	*	*		
1197	X2	0			CLAMP, DRUM	81336	C13200E5358	EA		5	*	*	*	*	*	34	2
1198	X2	0			ELBOW, LONG	81336	B13200E5350	EA		1	*	*	*	*	*	34	10
1199	X2	0			ELBOW, SHORT	81336	B13200E5353	EA		1	*	*	*	*	*	34	11
1200	X2	0			END CAP	81336	B13200E5347	EA		2	*	*	*	*	*	34	1
1201	X2	0			NOZZLE HEAD	81336	C13200E5342	EA		1	*	*	*	*	*	34	4
1202	X2	0			SCREW, TOGGLE: CLAMP DRUM CLAMPING	81336	A13200E5359	EA		5	*	*	*	*	*	34	3
1203	X2	0		3440-977-8672	NOZZLE ASSEMBLY: SPRAY	81336	A13200E5362	EA		10	*	*	*	*	*	34	16
1204					GROUP 95 - GENERAL USE STANDARDIZED PARTS												
1204A					9501 - BULK MATERIAL												
1205	P	0		5330-191-1096	FELT SHEET: 1/4 IN. THK, 30 IN. W, 36 IN. LG	00736	540-16	SH			*	*	*	5	1		

LINE NO.	(1) SOURCE, MAINT. AND RECOV. CODE (a) SOURCE	(b) MAINT.	(c) RECOV.	(2) FEDERAL STOCK NUMBER	(3) DESCRIPTION	MANUFACTURER'S CODE	MANUFACTURER'S PART NUMBER	(4) UNIT OF ISSUE	(5) QTY INC IN UNIT PACK	(6) QTY INC IN UNIT	(7) 30-DAY DS/GS MAINT. ALW. (a) 1-20	(b) 21-50	(c) 51-100	(8) 1-YR. ALW. PER. 100 EQUIP. CTYGCY. PLANNING	(9) DEPOT MAINT. ALW. PER. 100 EQUIP.	(10) ILLUSTRATION (a) FIG. NO.	(b) ITEM OR SYM. NO.
1206					PART III												
1206A					GROUP 01 - ENGINE												
1206B					0100 - ENGINE ASSEMBLY												
1207	X2	F			ENGINE, GASOLINE	66289	210068	EA		1	*	*	*	*	*		
1208		F		5305-527-4195	SCREW, CAP, HEXAGON HEAD: ENGINE MTG	96906	MS35291-115	EA		4	*	*	*	*	*	11	3
1209		F		5310-011-5551	WASHER, LOCK: ENGINE MTG			EA		4	*	*	*	*	*	11	4
1210					0101 - CRANKCASE, BLOCK, CYLINDER HEAD												
1211	X2	H	R		BLOCK ASSEMBLY, CYLINDER	66289	AA86A5S1	EA		1	*	*	*	*	*	6	4
1212	X2	O			EXTENSION, OIL DRAIN	82254	CFR40975	EA		1	*	*	*	*	*		
1213	P	F		2805-309-8040	SEAT, VALVE	66289	HG227D	EA		4	SEE GRP 0105 PART I						
1214		O		5307-011-2572	STUD, PLAIN: MANIFOLD MTG	66289	PC110	EA		2	SEE GRP 0108 PART I						
1215					0102 - CRANKSHAFT												
1216	X2	O			SHEAVE, CRANKSHAFT: BLOWER DRIVE	82254	CFR40088	EA		1	*	*	*	*	*	4	4
1217					0105 - VALVES, CAMSHAFTS AND TIMING SYSTEM												
1218	P	H		2805-526-8753	LIFTER, VALVE	66289	F66	EA		4	*	*	2	8	20	7	9
1219					0106 - ENGINE LUBRICATION SYSTEM												
1220		O		4730-278-4323	ADAPTER, STRAIGHT, PIPE TO TUBE: TEE TO GOVERNOR OIL LINE	66289	RF269	EA		1	*	*	*	*	*	10	16
1221		O		5306-542-4308	BOLT, MACHINE: FILTER MTG			EA		4	*	*	*	*	*	10	22
1223	X2	O		2940-358-2536	FILTER, FLUID, PRESSURE: OIL	66289	RV28	EA		1	*	*	*	*	*	10	
1224	X1				BODY ASSEMBLY	73370	5310	EA		1						10	20
1225	X2	O		2940-393-5988	COVER ASSEMBLY	73370	5241	EA		1	*	*	*	*	*	10	14
1226	X1				COVER, FILTER	73370	102033	EA		1						10	10
1227	X2	O		5330-056-9588	GASKET: FIBER	73370	102032	EA		1	*	*	*	*	*	10	9
1228	X1				HANDLE ASSEMBLY	73370	8112	EA		1						10	7
1229	X2	O			RING, SNAP	73370	102483	EA		1	*	*	*	*	*	10	11
1230	X2	O		5310-417-8620	WASHER, SHOULDERED	73370	10776	EA		1	*	*	*	*	*	10	13
1231	X2	O			SPRING, COMPRESSION	73370	10208	EA		1	*	*	*	*	*	10	12
1232	P	O		5330-298-0776	WASHER, NONMETALLIC: COVER SCREW	73370	10076	EA		1	*	2	2	15	100	10	8
1233	P	O		2940-141-9025	FILTER ELEMENT	73370	C21P2	EA		1	13	25	50	600	100	10	23
1234	P	O		5330-599-1285	GASKET, COVER WASHER, NONMETALLIC	73370	11582	EA		1	13	25	50	600	100	10	6

LINE NO.	(1) SOURCE, MAINT. AND RECOV. CODE (a) SOURCE	(b) MAINT.	(c) RECOV.	(2) FEDERAL STOCK NUMBER	(3) DESCRIPTION	MANUFACTURER'S CODE	MANUFACTURER'S PART NUMBER	(4) UNIT OF ISSUE	(5) QTY INC IN UNIT PACK	(6) QTY INC IN UNIT	(7) 30-DAY DS/GS MAINT. ALW. (a) 1-20	(b) 21-50	(c) 51-100	(8) 1-YR. ALW. PER 100 EQUIP. CTY/CCY. PLANNING	(9) DEPOT MAINT. ALW. PER 100 EQUIP.	(10) ILLUSTRATION (a) FIG. NO.	(b) ITEM OR SYM. NO.
1235		0		5310-368-1908	NUT, PLAIN, SQUARE: OIL FILTER STRAP	73370	13446	EA		1	*	*	*	*	*	10	5
1236		0		5305-013-3083	SCREW, MACHINE: OIL FILTER STRAP	73370	12398	EA		1	*	*	*	*	*	10	21
1237	X2	0		2940-732-4214	STRAP: OIL FILTER MTG	73370	11563	EA		1	*	*	*	*	*	10	3
1238		0		5310-013-8542	WASHER, LOCK: OIL FILTER STRAP	73370	10124	EA		1	*	*	*	*	*	10	4
1239		0		5310-176-8160	NUT, PLAIN, HEXAGON: FILTER MTG			EA		4	*	*	*	*	*	10	1
1240		0		4730-603-4470	TEE, PIPE: OIL FILTER INLET	66289	RF1301	EA		1	*	*	*	*	*	10	15
1241	X2	0		2940-542-3807	TUBE ASSEMBLY, OIL	66289	RM1319G	EA		1	*	*	*	*	*	10	25
1242		0		5310-596-4911	WASHER, LOCK: FILTER MTG	66289	PE4	EA		4	*	*	*	*	*	10	2
1243					GROUP 03 - FUEL SYSTEM												
1243A					0306 - TANKS, LINES, FITTINGS												
1244	X2	0			CLIP, FUEL LINE	82254	CFA40970	EA		1	*	*	*	*	*		
1245	X2	0			NUT: CLIP SCREW	82254	CFA40974	EA		1	*	*	*	*	*		
1246	X2	0			SCREW: CLIP MTG	82254	CFA40972	EA		1	*	*	*	*	*		
1247		0		5310-595-7235	WASHER, LOCK: CLIP MTG	96906	MS35333-20	EA		1	*	*	*	*	*		
1248					0309 - FUEL FILTERS												
1249	X2	0		4730-639-9638	STRAINER ASSEMBLY	66289	LP43	EA		1	*	*	*	*	*		
1250	X1			2910-382-8768	BAIL ASSEMBLY	78480	OW447	EA		1						16	20
1251	P	0		2910-354-3834	BOWL, SEDIMENT, FUEL: GLASS	78480	06137	EA		1	2	2	3	30	10	16	19
1252	X1			2910-305-5749	COVER, STRAINER	78480	07770	EA		1						16	16
1253	P	0		2910-142-2738	STRAINER ELEMENT, SEDIMENT	78480	OW352	EA		1	*	*	2	10	20	16	17
1254	X1			2910-368-6657	VALVE, FUEL REGULATING: SHUTOFF	78480	07769	EA		1						16	21
1255	P	0		5330-187-2962	WASHER, NONMETALLIC: BOWL MTG	78480	06096	EA		1	4	8	17	200	100	16	18
1256					GROUP 04 - EXHAUST SYSTEM												
1256A					0401 - MUFFLER AND PIPES												
1257	X2	0			GUARD, MUFFLER	82254	CFR40870	EA		1	*	*	*	*	*		
1258		0		5310-584-5005	NUT, PLAIN, HEXAGON: MUFFLER GUARD TO CANOPY	96906	MS35690-405	EA		4	*	*	*	*	*		
1259		0		5305-637-4028	SCREW, CAP, HEXAGON HEAD: MUFFLER GUARD TO CANOPY	96906	MS35291-3	EA		4	*	*	*	*	*		
1260		0		5310-011-5544	WASHER, LOCK: MUFFLER GUARD TO CANOPY	96906	MS35333-4	EA		8	*	*	*	*	*		
1261					GROUP 05 - COOLING SYSTEM												
1261A					0502 - DEFLECTORS, SHROUDS												
1262		F		5306-019-3988	BOLT, MACHINE: FLYWHEEL SHROUD MTG	66289	XD13	EA		3	*	*	*	*	*	18	10
1263	X2	F			SHROUD, FLYWHEEL	66289	SE135AH	EA		1	*	*	*	*	*	18	8

LINE NO.	(1) SOURCE, MAINT. AND RECOV. CODE (a) SOURCE	(b) MAINT.	(c) RECOV.	(2) FEDERAL STOCK NUMBER	(3) DESCRIPTION	MANUFACTURER'S CODE	MANUFACTURER'S PART NUMBER	(4) UNIT OF ISSUE	(5) QTY INC IN UNIT PACK	(6) QTY INC IN UNIT	(7) 30-DAY DS/GS MAINT. ALW. (a) 1-20	(b) 21-50	(c) 51-100	(8) 1-YR. ALW. PER. 100 EQUIP. CTYGCY. PLANNING	(9) DEPOT MAINT. ALW. PER. 100 EQUIP.	(10) ILLUSTRATION (a) FIG. NO.	(b) ITEM OR SYM. NO.
1264		F		5310-596-4911	WASHER, LOCK: FLYWHEEL SHROUD MTG	66289	PE4	EA		3	*	*	*	*	*	18	9
1265					GROUP 06 - ELECTRICAL SYSTEM												
1265A					0605 - IGNITION COMPONENTS												
1266	P	O	R	2920-979-3504	MAGNETO (INCLUDES COMPONENTS OF REPAIR KIT, STOCK NO. 2920-844-2035)	66289	Y93DS1	EA		1	*	*	2	10	2		
1267	X1				CAP, END: MAGNETO	82796	NY2430A	EA		1						36	7
1268	X1				COIL, MAGNETO	82796	QT2477C	EA		1						35	16
1269	X1				FERRULE	82796	M1077	EA		1							
1270	X1				HOUSING: MAGNETO	82796	HU2425	EA		1						35	1
1271	X1				OUTLET, CABLE	82796	Z2474	EA		1						36	6
1272	X2	O			PLATE, NAME: MAGNETO	82796	A195	EA		1	SEE GRP 2210						
1273	X1				ROTOR, MAGNETIC	82796	XS2480	EA		1						35	30
1274	X1			5305-042-0450	SCREW: CONDENSER TERMINAL	82796	6S6U	EA		1							
1275	X1				SCREW: CONTACT SUPPORT	82696	8S5U	EA		2						36	18
1276	X1			5305-010-0749	SCREW, MACHINE: BREAKER ARM TERMINAL	82796	8S4U	EA		1						36	21
1277	X1				SCREW, MACHINE: CABLE OUTLET, No. 8-32 x 7/16 IN.	82796	8S7K	EA		1						35	29
1278	X1			5305-012-1832	SCREW, MACHINE: CONDENSER MTG	82796	6S6D	EA		2						36	17
1279	X1				SCREW: WASHER RETAINING, 8-32 x 3/8 IN.	82796	8S6N	EA		1							
1280	X1			5305-543-2281	SETSCREW: COIL BRIDGE	82796	31SS12B	EA		2						35	26
1281	X1				SWITCH, COMPLETE GROUND	82796	JX2514C	EA		1						36	14
1282	X1			5310-794-8554	WASHER, LOCK: RETAINING WASHER SCREW	82796	8LW6	EA		1						35	28
1283	X1				NUT, GROUND SWITCH	82796	D2735A	EA		1						36	13
1284	X1				PLUNGER, GROUND SWITCH	82796	CW2514	EA		1						36	12
1285	X1				SPRING, GROUND SWITCH	82796	E2513A	EA		1						36	11
1286	X1				COUPLING, IMPULSE	82796	ZV2563C	EA		1						35	
1287	X1				COUPLING, HUB ASSEMBLY	82796	WY2563	EA		1						35	7
1288	X1				SHELL, COUPLING	82796	AZ5957	EA		1						35	9
1289	X1			2920-428-7583	SPRING, COUPLING DRIVE	82796	E2565	EA		1						35	8
1290	X1			2920-428-7572	SPRING, PAWL	82796	C5963	EA		1						35	27
1291	X1			2920-602-4258	BEARING, CAM END	82796	D5949A	EA		1						35	19
1292	X1			3110-144-8998	BEARING, DRIVE END	82796	C5949	EA		1						35	13
1293	X1			2920-286-2712	BUSHING: GEAR COUPLING	82796	F2572	EA		1						35	11
1294	X1				BUTTON, GROUND SWITCH	82796	C2741	EA		1							
1295	X1			2920-831-1171	COVER, VENT	82796	B6030A	EA		2						35	24
1296	X1			5315-715-1699	KEY: ROTOR SHAFT TO IMPULSE COUPLING	92697	3K1	EA		1						35	15
1297	X1			5310-366-7158	NUT, CASTELLATED, HEXAGON: COUPLING	82796	M2570	EA		1						35	12
1298	X1			5305-206-8263	SCREW, MACHINE: BEARING SUPPORT	82796	8S6G	EA		4						35	21
1299	X1				SCREW, VENT: No. 6-32 x 1/4 IN.	82796	6S4U	EA		2						35	23
1300	X1			5305-206-0169	SETSCREW: COUPLING PAWL STOP	82696	A2568	EA		1						35	2

LINE NO.	(1) SOURCE, MAINT. AND RECOV. CODE (a) SOURCE	(b) MAINT.	(c) RECOV.	(2) FEDERAL STOCK NUMBER	(3) DESCRIPTION	MANUFACTURER'S CODE	MANUFACTURER'S PART NUMBER	(4) UNIT OF ISSUE	(5) QTY INC IN UNIT PACK	(6) QTY INC IN UNIT	(7) 30-DAY DS/GS MAINT. ALW. (a) 1-20	(b) 21-50	(c) 51-100	(8) 1-YR. ALW. PER. 100 EQUIP. CTYGCY. PLANNING	(9) DEPOT MAINT. ALW. PER. 100 EQUIP.	(10) ILLUSTRATION (a) FIG. NO.	(b) ITEM OR SYM. NO.
1301	X1			2920-537-1330	SPRING, COIL LEAD	82796	B3967	EA		2						35	17
1302	X1			2920-354-0766	SUPPORT, BEARING	82796	BY4631	EA		1						35	20
1303	X1				WASHER: COUPLING PLATE	82796	B2665K	EA		1						35	10
1304	X1			5310-186-7410	WASHER, FLAT: CONTACT SUPPORT MTG	82796	B5969	EA		2						36	19
1305	X1			2920-354-0750	WICK AND HOLDER, CAM	82796	G2788	EA		1						35	22
1306	X1			5335-830-9983	WIRE FABRIC, VENT	82796	C6032B	EA		2						35	25
1307	X1			2920-360-8381	GASKET: MAGNETO MTG (COMPONENT OF GASKET SET, STOCK NO. 2805-720-4773, SEE GROUP 0100, PART 1) (CAN BE MANUFACTURED FROM PAPER, STOCK NO. 5330-233-5846)	66289	QD616	EA		1						36	3
1308	X2	0		2990-603-4773	GEAR, HELICAL: DRIVE	66289	GD93C3	EA		1	*	*	*	*	*	36	4
1309		0		5310-012-0377	NUT, PLAIN, HEXAGON: MAGNETO MTG			EA		1						36	24
1310		0		5315-011-2726	PIN, COTTER: DRIVE GEAR			EA		1	*	*	*	*	*	36	23
1311		0		5305-514-9662	SCREW, CAP, HEXAGON HEAD: MAGNETO MTG			EA		2	*	*	*	*	*	36	1
1312		0		5310-582-9930	WASHER, LOCK: MAGNETO MTG	66289	PE76A	EA		2	*	*	*	*	*	36	2
1313		0		5310-595-7237	WASHER, LOCK: MAGNETO MTG	66289	PE56A	EA		1	*	*	*	*	*	36	22
1314	P	0		2920-844-2035	REPAIR KIT, MAGNETO	82796	SK72	EA		1	2	3	5	60	2		
1315	X1			2920-142-1888	ARM, CONTACT SET, DISTRIBUTOR	82796	Q2437A	EA		1						36	20
1316	X1			5340-598-3180	CLIP, RETAINING: ROTOR DRIVE SHAFT	82796	D1498D	EA		1						35	3
1317	X1			5340-675-5253	CLIP, RETAINING: SWITCH	82796	C1498G	EA		1						36	9
1318	X1				CONDENSER	82796	QX2433	EA		1						36	16
1319	X1			2920-217-3489	GASKET: END CAP	82796	N2498	EA		1						36	5
1320	X1			5305-281-6387	SCREW, CAP END	82796	1CS10D	EA		4						36	8
1321	X1				SEAL, CONDENSER	82796	P2473	EA		1						36	15
1322	X1			2920-356-1221	SEAL: ROTOR SHAFT	82796	G3861	EA		1						35	5
1323	X1				SPACER, GROUND SWITCH	82796	F4373	EA		1						36	10
1324	X1			5310-794-8555	WASHER, FLAT: RETAINING DRIVE END BEARING	82796	A2492D	EA		1						35	14
1325	X1			5310-205-7981	WASHER, FLAT: ROTOR SHAFT INNER SEAL	82796	A2492C	EA		1						35	4
1326	X1			5310-205-7981	WASHER: GREASE RETAINING INNER BEARING SUPPORT	82796	A2492C	EA		1						35	4
1327	X1				WASHER: GREASE RETAINING, OUTER BEARING SUPPORT	82796	E2493	EA		1						35	18
1328	X1			5310-285-1591	WASHER: ROTOR SHAFT OUTER SEAL	82796	A2492A	EA		1						35	6
1329	P	0		2920-887-1289	CABLE, IGNITION: SPARK PLUG	66289	YD300-23	EA		2	*	*	2	10	10	2	4
1330	X2	0			CLAMP, CABLE: SPARK PLUG WIRES	66289	PG559	EA		2	*	*	*	*	*	2	1
1331		0		5305-013-1238	SCREW, MACHINE: CABLE CLAMP MTG	66289	XA33	EA		2	*	*	*	*	*	2	3
1332	P	0		2920-841-1890	SPARK PLUG	11583	XMD18	EA		2	5	10	20	240	200	2	6
1333		0		5310-013-8542	WASHER, LOCK: CABLE CLAMP MTG			EA		1	*	*	*	*	*	2	2
1334	P	0		5330-599-5356	GASKET: SPARK PLUG	11583	A676	EA		2	2	3	5	60	200	2	5

LINE NO.	(1) SOURCE, MAINT. AND RECOV. CODE (a) SOURCE	(b) MAINT.	(c) RECOV.	(2) FEDERAL STOCK NUMBER	(3) DESCRIPTION	MANUFACTURER'S CODE	MANUFACTURER'S PART NUMBER	(4) UNIT OF ISSUE	(5) QTY INC IN UNIT PACK	(6) QTY INC IN UNIT	(7) 30-DAY DS. GS MAINT. ALW. (a) 1-20	(b) 21-50	(c) 51-100	(8) 1-YR. ALW. PER. 100 EQUIP. CTYGCY. PLANNING	(9) DEPOT MAINT. ALW. PER. 100 EQUIP.	(10) ILLUSTRATION (a) FIG. NO.	(b) ITEM OR SYM. NO.
1335					GROUP 22 - BODY CHASSIS OR HULL, AND ACCESSORY ITEMS												
1335A					2210 - DATA PLATES												
1336	X2	0			PLATE, INSTRUCTION: ENGINE OPERATING	66289	SD252	EA		1	*	*	*	*	*		
1337	X2	0			PLATE, INSTRUCTION: MILITARY STANDARD PARTS	66289	SD197B	EA		1	*	*	*	*	*		
1338	X2	0			PLATE, NAME: MAGNETO	82796	A195	EA		1	*	*	*	*	*		
1339		0		5305-335-4180	SCREW, DRIVE: NAMEPLATE MTG	79575	5250	EA		2	*	*	*	*	*		
1340					GROUP 57 - SPRAY EQUIPMENT COMPONENTS												
1340A					5703 - AIR BLOWER ASSEMBLY												
1341	X2	0			ADAPTER: OVERBOARD OIL DRAIN	04255	2300X6	EA		1	*	*	*	*	*		
1342	X2	0			ELBOW: OVERBOARD OIL DRAIN	04255	3400X6	EA		1	*	*	*	*	*		
1343	X2	0			FILTER, SILENCER: AIR BLOWER	00736	BW8GS	EA		1	*	*	*	*	*	32	
1344	X1				BODY, FILTER	00736	BW8GS825	EA		1						32	5
1345	X2	0			ELEMENT, FILTER SILENCER	00736	BW8-826	EA		1	*	*	*	*	*	32	6
1346	P	0		3740-542-3716	GASKET: ELEMENT TO BODY AND TOP	00736	10M06	EA		2	*	2	2	20	10	32	4
1347		0		5310-010-3129	NUT, PLAIN, WING: TOP TO BODY	00736	395YZ20	EA		1	*	*	*	*	*	32	1
1348	X2	0			TOP ASSEMBLY	00736	BW8-800	EA		1	*	*	*	*	*	32	8
1349	M	0			FELT: TOP ASSEMBLY	00736	540-16	EA		1						32	7
1349A	P	0		5330-191-1096	MANUFACTURE FROM: FELT SHEET (7 IN BY 7 IN. REQUIRED)			SH			SEE GRP 9501						
1350		0		5310-366-6294	WASHER, FLAT: TOP TO BODY			EA		1	*	*	*	*	*	32	3
1351		0		5310-013-8542	WASHER, LOCK: TOP TO BODY			EA								32	2
1352					5704 - SPRAY DUCTS AND MANIFOLDS												
1353	X2	0			MANIFOLD SPRAY ASSEMBLY	81336	D13200E5341	EA		1	*	*	*	*	*		
1354	X2	0			CLAMP, DRUM	81336	C13200E5358	EA		5	*	*	*	*	*	34	2
1355	X2	0			ELBOW, LONG	81336	B13200E5350	EA		1	*	*	*	*	*	34	10
1356	X2	0			ELBOW, SHORT	81336	D13200E5353	EA		1	*	*	*	*	*	34	11
1357	X2	0			END CAP	81336	B13200E5347	EA		2	*	*	*	*	*	34	1
1358	X2	0			NOZZLE HEAD	81336	C13200E5342	EA		1	*	*	*	*	*	34	4
1359	X2	0			SCREW, TOGGLE: CLAMP DRUM CLAMPING	81336	A13200E5359	EA		5	*	*	*	*	*	34	3
1360	X2	0			NOZZLE ASSEMBLY: SPRAY	82254	CFA40961	EA		10	*	*	*	*	*	34	16
1361	X1				HUB ASSEMBLY	82254	CFA40964	EA		10							
1362	X1				IMPELLER: SPRAY NOZZLE	87373	QW5149	EA		10							
1363	X1				NUT, SELF-LOCKING, HEXAGON: FACE PLATE SCREW, No. 4-40 THD SIZE	82254	CFA40963	EA		20							
1364	X1				PLATE, FACE	87373	QW5155	EA		10							

LINE NO.	(1) SOURCE, MAINT. AND RECOV. CODE (a) SOURCE	(b) MAINT.	(c) RECOV.	(2) FEDERAL STOCK NUMBER	(3) DESCRIPTION	MANUFACTURER'S CODE	MANUFACTURER'S PART NUMBER	(4) UNIT OF ISSUE	(5) QTY INC IN UNIT PACK	(6) QTY INC IN UNIT	(7) 30-DAY DS/GS MAINT. ALW. (a) 1-20	(b) 21-50	(c) 51-100	(8) 1-YR. ALW. PER 100 EQUIP. CTYGCY. PLANNING	(9) DEPOT MAINT. ALW. PER. 100 EQUIP.	(10) ILLUSTRATION (a) FIG. NO.	(b) ITEM OR SYM. NO.
1365	X1				SCREW, MACHINE: FACE PLATE TO NOZZLE, No. 4-40 THD SIZE, 3/4 IN. LG	82254	CFA40962	EA		20							
1366					5708 - TANKS, VALVES, LINES, HOSES, FITTINGS, AND LIQUID STRAINERS												
1367	X2	0			CLIP, HOSE	82254	CFA40971	EA		2	*	*	*	*	*		
1368	X2	0			NUT, PLAIN, HEXAGON: CLIP MTG	82254	CFA40974	EA		2	*	*	*	*	*		
1369	X2	0			SCREW, MACHINE: CLIP MTG, 6-32 x 1/2, RDHD	82254	CFA40972	EA		2	*	*	*	*	*		
1370		0		5310-595-7235	WASHER, LOCK: CLIP MTG	96906	MS35333-20	EA		2	*	*	*	*	*		
1371					GROUP 95 - GENERAL USE STANDARDIZED PARTS												
1371A					9501 - BULK MATERIAL												
1372	P	0		5330-191-1096	FELT SHEET			SH			*	*	*	5	1		

LINE NO.	(1) SOURCE, MAINT. AND RECOV. CODE (a) SOURCE	(b) MAINT.	(c) RECOV.	(2) FEDERAL STOCK NUMBER	(3) DESCRIPTION	MANUFACTURER'S CODE	MANUFACTURER'S PART NUMBER	(4) UNIT OF ISSUE	(5) QTY INC IN UNIT PACK	(6) QTY INC IN UNIT	(7) 30-DAY DS/GS MAINT. ALW. (a) 1-20	(b) 21-50	(c) 51-100	(8) 1-YR. ALW. PER. 100 EQUIP. CTY/GCY. PLANNING	(9) DEPOT MAINT. ALW. PER. 100 EQUIP.	(10) ILLUSTRATION (a) FIG. NO.	(b) ITEM OR SYM. NO.
1373					PART IV												
1373A					GROUP 01 - ENGINE												
1373B					0100 - ENGINE ASSEMBLY												
1374	X2	F			ENGINE, GASOLINE	66289	188809	EA		1	*	*	*	*	*		
1375		F		5305-527-4195	SCREW, CAP, HEXAGON HEAD: ENGINE MTG	96906	MS35291-115	EA		4	*	*	*	*	*	11	3
1376		F		5310-011-5551	WASHER, LOCK: ENGINE MTG			EA		4	*	*	*	*	*	11	4
1377					0101 - CRANKCASE, BLOCK, CYLINDER HEAD												
1378	X2	H	R		BLOCK ASSEMBLY, CYLINDER	66289	AA86A5S2	EA		1	*	*	*	*	*	6	4
1379	P	F		2805-309-8040	SEAT, VALVE	66289	HG227D	EA		4	SEE GRP 0105 PART I						
1380		O		5307-011-2572	STUD, PLAIN: MANIFOLD MTG			EA		2	SEE GRP 0108 PART I						
1381					0102 - CRANKSHAFT												
1382	X2	O			SHEAVE, CRANKSHAFT: BLOWER DRIVE	82254	CFR40088	EA		1	*	*	*	*	*	4	4
1383					0105 - VALVES, CAMSHAFTS AND TIMING SYSTEM												
1384	P	H		2805-339-5598	LIFTER, VALVE	66289	F63	EA		4	*	*	2	8	20		
1385		H		5306-038-4416	SCREW, SELF-LOCKING: TAPPET ADJUSTING	66289	PB169A	EA		4	*	*	*	*	*	7	8
1386					0106 - ENGINE LUBRICATION SYSTEM												
1387		O		4730-278-4323	ADAPTER, STRAIGHT, PIPE TO TUBE: TEE TO GOVERNOR OIL LINE	66289	RF269	EA		1	*	*	*	*	*	10	16
1388		O		5306-543-4308	BOLT, MACHINE: FILTER MTG			EA		4	*	*	*	*	*	10	22
1389	X2	O			FILTER ASSEMBLY, OIL	73370	F3P	EA		1	*	*	*	*	*	10	
1390	X1				BODY ASSEMBLY	73370	8134	EA		1						10	20
1391	X2	O			COVER ASSEMBLY	73370	8113	EA		1	*	*	*	*	*	10	14
1392	X1				COVER, FILTER	73370	102033	EA		1						10	10
1393	X2	O		5330-056-9588	GASKET: FIBER	73370	102032	EA		1	*	*	*	*	*	10	9
1394	X1				HANDLE ASSEMBLY	73370	8112	EA		1						10	7
1395	X2	O			RING, SNAP	73370	102483	EA		1	*	*	*	*	*	10	11
1396	X2	O		5310-017-8620	WASHER, SHOULDERED	73370	10776	EA		1	*	*	*	*	*	10	13
1397	X2	O			SPRING, COMPRESSION	73370	10208	EA		1	*	*	*	*	*	10	12
1398	P	O		5330-298-0776	WASHER, NONMETALLIC: COVER SCREW	73370	10076	EA		1	*	2	2	15	100	10	8
1399	P	O		2940-529-2738	FILTER ELEMENT, FLUID, PRESSURE: OIL	73370	6946	EA		1	13	25	50	600	100	10	23
1400		O		5310-368-1908	NUT, PLAIN, SQUARE: OIL FILTER STRAP	73370	13446	EA		1	*	*	*	*	*	10	5

LINE NO.	(1) SOURCE, MAINT. AND RECOV. CODE (a) SOURCE	(b) MAINT.	(c) RECOV.	(2) FEDERAL STOCK NUMBER	(3) DESCRIPTION	MANUFACTURER'S CODE	MANUFACTURER'S PART NUMBER	(4) UNIT OF ISSUE	(5) QTY INC IN UNIT PACK	(6) QTY INC IN UNIT	(7) 30-DAY DS/GS MAINT. ALW. (a) 1-20	(b) 21-50	(c) 51-100	(8) 1-YR. ALW. PER. 100 EQUIP. CTY/GCY. PLANNING	(9) DEPOT MAINT. ALW. PER. 100 EQUIP.	(10) ILLUSTRATION (a) FIG. NO.	(b) ITEM OR SYM. NO.
1401		0		5305-013-3080	SCREW, MACHINE: OIL FILTER STRAP	73370	12398	EA		1	*	*	*	*	*	10	21
1402	X2	0			STRAP, BODY	73370	10757	EA		1	*	*	*	*	*	10	3
1403		0		5310-013-8542	WASHER, LOCK: OIL FILTER STRAP	73370	10124	EA		1	*	*	*	*	*	10	4
1404	P	0		5330-291-3405	WASHER, NONMETALLIC: COVER	73370	10611	EA		1	13	25	50	600	100	10	6
1405	P	0		2940-506-6816	HOSE ASSEMBLY, RUBBER: OIL LINE, PRESSURE	66289	RM1299	EA		1	*	*	2	6	10	10	24
1406	M	0			LINE ASSEMBLY, OIL: CRANKCASE TO GOVERNOR	66289	RM796	EA		1						10	25
					MANUFACTURE FROM:												
1406A		0		4730-011-6452	NUT, TUBE COUPLING	79470	1110X4	EA		2	*	*	*	*	*		
1407		0		5310-176-8160	NUT, PLAIN, HEXAGON: FILTER MTG			EA		4	*	*	*	*	*	10	1
1408		0		4730-603-4470	TEE, PIPE: OIL FILTER INLET	66289	RF1301	EA		1	*	*	*	*	*	10	15
1409	P	0		4710-277-5525	TUBE, COPPER (6 1/2 IN. REQUIRED)			FT			SEE GRP 9501						
1410		0		5310-596-4911	WASHER, LOCK: FILTER MTG	66289	PE4	EA		4	*	*	*	*	*	10	2
1411					GROUP 03 - FUEL SYSTEM												
1411A					0309 - FUEL FILTERS												
1412	X2	0		4730-639-9638	STRAINER ASSEMBLY	78480	OW480T	EA		1	*	*	*	*	*		
1413	X1				BAIL ASSEMBLY	78480	07766	EA		1						16	20
1414	P	0		2910-358-4317	BOWL, SEDIMENT, FUEL: GLASS	78480	07759	EA		1	2	2	3	30	10	16	19
1415	X1			2910-305-5749	COVER, STRAINER	78480	07770	EA		1						16	16
1416	P	0		2910-358-5327	SCREEN, FUEL STRAINER	78480	07762	EA		1	*	*	2	10	20	16	17
1417	X1			2910-368-6657	VALVE, FUEL REGULATING: SHUT OFF	78480	07769	EA		1						16	21
1418	P	0		2910-282-7557	WASHER, NONMETALLIC: BOWL MTG	78480	08227	EA		1	4	8	17	200	100	16	18
1419					GROUP 05 - COOLING SYSTEM												
1419A					0502 - DEFLECTORS, SHROUDS												
1420		F		5306-019-3988	BOLT, MACHINE: FLYWHEEL SHROUD MTG	66289	XD13	EA		3	*	*	*	*	*	18	10
1421	X2	F			SHROUD, FLYWHEEL	66289	SE135Y	EA		1	*	*	*	*	*	18	8
1422		F		5310-596-4911	WASHER, LOCK: FLYWHEEL SHROUD MTG	66289	PE3	EA		3	*	*	*	*	*	18	9
1423					GROUP 06 - ELECTRICAL SYSTEM												
1423A					0605 - IGNITION COMPONENTS												
1424	P	0		2920-566-7806	CABLE, SPECIAL PURPOSE	66289	YD212D	EA		2	*	*	2	10	10	2	4
1425	X2	0		5340-447-9222	CLAMP, CABLE: SPARK PLUG WIRES	66289	PG314	EA		1	*	*	*	*	*	2	1
1426	P	0	R	2920-800-8156	MAGNETO ASSEMBLY (INCLUDES COMPONENTS OF REPAIR KIT, STOCK NO. 2920-712-1267)	79575	XHS2484	EA		1	*	*	2	10	2	22	
1427	X1			2930-353-6609	BEARING, SLEEVE: DRIVE CUP	79575	5518	EA		1						22	4
1428	X1			2920-374-3481	BEARING UNIT, BALL, CYLINDRICAL CARTRIDGE: ROTOR SHAFT	79575	X7672	EA		1							

LINE NO.	(1) SOURCE, MAINT. AND RECOV. CODE (a) SOURCE	(b) MAINT.	(c) RECOV.	(2) FEDERAL STOCK NUMBER	(3) DESCRIPTION	MANUFACTURER'S CODE	MANUFACTURER'S PART NUMBER	(4) UNIT OF ISSUE	(5) QTY INC IN UNIT PACK	(6) QTY INC IN UNIT	(7) 30-DAY DS GS MAINT. ALW. (a) 1-20	(b) 21-50	(c) 51-100	(8) 1-YR. ALW. PER. 100 EQUIP. CTYGCY. PLANNING	(9) DEPOT MAINT. ALW. PER. 100 EQUIP.	(10) ILLUSTRATION (a) FIG. NO.	(b) ITEM OR SYM. NO.
1429	X1			3110-144-8882	BEARING, BALL ANNULAR: ROTOR	79575	7617	EA		1						22	6
1430	X1			2920-353-6611	RETAINER, BALL BEARING	79575	5567	EA		1						22	5
1431	X1				BRACKET, TERMINAL	79575	X7724	EA		1						22	57
1432	X1			2920-367-7985	CLAMP, ELECTRICAL: COIL CORE	79575	5633	EA		2						22	19
1433	X1			2920-335-4178	COIL, MAGNETO	79575	X7895	EA		1						22	21
1434	X1			4020-428-3751	CORE ASSEMBLY: MAGNETO COIL	79575	X9524	EA		1						22	22
1435	X1			2920-607-1324	COUPLING, MAGNETO: IMPULSE	79575	X8774	EA		1							
1436	X1			2920-366-6269	ARM, TRIP	79575	A179X	EA		1						22	33
1437	X1			2920-368-6715	CUP, MAGNETO DRIVE	79575	2061A	EA		1						22	26
1438	X1			2920-740-2845	FLANGE, DRIVE GROUP	79575	X6586	EA		1						22	35
1439	X1				NUT, IMPULSE LOCK	79575	8739	EA		1						22	28
1440	X1			2920-366-6306	RETAINER, DRIVE SPRING	79575	2288	EA		1						22	31
1441	X1			2920-367-7999	RING, LOCK: RETAINING, IMPULSE COUPLING	79575	6424	EA		1						22	24
1442	X1			2920-662-9135	SPACER, DRIVE FLANGE	79575	2122	EA		1						22	34
1443	X1			5340-353-6606	SPRING, SPIRAL, TENSION: IMPULSE COUPLING	79575	15-186	EA		1						22	27
1444	X1			5340-740-2871	SPRING, TRIP ARM	79575	6585	EA		1						22	32
1445	X1			2920-740-2846	WASHER: DRIVE CUP SPACER	79575	7908	EA		1						22	29
1446	X1			5310-187-3458	WASHER, FLAT: DRIVE FLANGE	79575	M42XA	EA		1						22	30
1447	X1			5310-353-6620	WASHER, THRUST	79575	6425	EA		1						22	25
1448	X1			2920-757-0480	COVER, UNIT	79575	X7910	EA		1						22	16
1449	X1				ROD GROUP, GROUND	79575	X7867	EA		1						22	48
1450	X1			5305-276-7951	SCREW, MACHINE: TERMINAL BLOCK MTG			EA		3						22	13
1451	X1			2920-598-9432	SPRING, HELICAL, COMPRESSION	79575	6732	EA		2						22	50
1452	X1			5940-314-0255	TERMINAL BLOCK: HIGH-TENSION	79575	X7592	EA		1						22	15
1453	X1			5310-013-5830	WASHER, LOCK: TERMINAL BLOCK MTG			EA		3						22	14
1454	X1			8305-740-2859	FELT, STRIP: BREAKER ARM	79575	7644	EA		1						22	58
1455	X1			5330-297-4578	GASKET: IMPULSE STOP	79575	5519	EA		1						22	42
1456	X1			2920-360-8381	GASKET: MAGNETO MTG (COMPONENT OF GASKET SET, STOCK NO. 2805-720-4773, GROUP 0100, PART 1) (CAN BE MANUFACTURED FROM PAPER, STOCK NO. 5330-233-5846)	66289	QD616	EA		1						22	3
1457	X1				GEAR, DRIVE	79575	6957	EA		1						22	23
1458	X1				HOUSING, MAIN: MAGNETO	79575	X8598	EA		1						22	11
1459	X1				LEAD, ELECTRICAL: BREAKER TO CAPACITOR	79575	X7872	EA		1						22	55
1460	X1			5310-012-0614	NUT, PLAIN, HEXAGON: IMPULSE STOP SETSCREW LOCKING			EA		1						22	38
1461	X1			2510-030-7699	PLATE, IMPULSE STOP	79575	X8555	EA		1						22	37
1462	X1				PLATE, NAME: MAGNETO	79575	8792	EA		1	SEE CRP 2210						
1463	X1			2920-740-2873	ROTOR	79575	Y7569	EA		1						22	10
1464	X1			5305-281-8308	SCREW, ASSEMBLED WASHER: BREAKER CLAMP, CONTACT MTG, CORE CLAMP MTG	79575	5411	EA		4						22	20

LINE NO.	(1) SOURCE, MAINT. AND RECOV. CODE (a) SOURCE	(b) MAINT.	(c) RECOV.	(2) FEDERAL STOCK NUMBER	(3) DESCRIPTION	MANUFACTURER'S CODE	MANUFACTURER'S PART NUMBER	(4) UNIT OF ISSUE	(5) QTY INC IN UNIT PACK	(6) QTY INC IN UNIT	(7) 30-DAY DS. GS MAINT. ALW. (a) 1-20	(b) 21-50	(c) 51-100	(8) 1-YR. ALW. PER 100 EQUIP. CTYCCY. PLANNING	(9) DEPOT MAINT. ALW. PER. 100 EQUIP.	(10) ILLUSTRATION (a) FIG. NO.	(b) ITEM OR SYM. NO.
1465	X1			5305-639-6026	SCREW, ASSEMBLED WASHER: TERMINAL BRACKET MTG	79575	5900	EA		1						22	56
1466	X1			5305-335-4180	SCREW, DRIVE: NAMEPLATE MTG	79575	5250	EA		2	SEE GRP 2210						
1467	X1			5305-424-2999	SCREW, MACHINE: COVER MTG	79575	5622	EA		3						22	18
1468	X1			5305-022-5561	SCREW, MACHINE: IMPULSE STOP CLAMP	79575	6465	EA		4						22	41
1469	X1			5305-638-6834	SETSCREW: IMPULSE STOP			EA		1						22	39
1470	X1			2920-353-6614	SHIELD, BALL BEARING	79575	5926	EA		1						22	8
1471	X1			2920-353-6610	SPACER, SLEEVE: BEARING CAGE	79575	5520	EA		1						22	9
1472	X1			5310-275-1353	WASHER: COVER MTG	79575	1XA256	EA		3						22	17
1473	X1			5310-188-4185	WASHER, FLAT: BREAKER ARM PIVOT	79575	3219	EA		1						22	52
1474	X1			5310-351-0698	WASHER, FLAT: BREAKER POINT ALIGNING	79575	5717	EA		1						22	59
1475	X1				WASHER, FLAT: POINT ALIGNMENT	66289	10407	EA		1						22	51
1476	X1			5310-012-1744	WASHER, LOCK: IMPULSE STOP CLAMP			EA		4						22	40
1477	X1			5330-262-3306	WICK: CAM WIPER, FELT	79575	6984	EA		1						22	54
1478		0		5310-012-0377	NUT, PLAIN, HEXAGON: MAGNETO MTG			EA		1	*	*	*	*	*	22	44
1479	P	0		2920-712-1267	REPAIR KIT, MAGNETO	81336	79575-4	EA		1	2	3	5	60	2		
1480	X1			2920-662-9133	BEARING, SLEEVE: BREAKER PLATE	79575	5610	EA		1						22	46
1481	X1			5910-740-2855	CONDENSER, CAP	79575	X7720	EA		1						22	49
1482	X1			2920-740-2882	CONTACT SET, DISTRIBUTOR	79575	X8551	EA		1						22	47
1483	X1			2920-428-3830	DEFLECTOR, DIRT AND OIL	79575	6204	EA		1						22	36
1484	X1			2920-740-2852	GASKET: COVER, LEAD	79575	7871	EA		1						22	12
1485	X1			5315-367-7994	PIN, LOCK: BREAKER ARM	79575	4210	EA		1						22	53
1486	X1			5340-281-6688	RING, RETAINING: ROTARY BEARINGS	79575	5516	EA		1						22	7
1487	X1			2920-353-6618	SEAL, PLAIN: OIL	79575	6199	EA		1						22	43
1488		0		5305-514-9662	SCREW, CAP, HEXAGON HEAD: MAGNETO MTG			EA		2	*	*	*	*	*	22	1
1489		0		5305-013-1238	SCREW, MACHINE: CABLE CLAMP ATTACHMENT	66289	XA33	EA		1	*	*	*	*	*	2	3
1490	P	0		2920-293-5212	SPARK PLUG: 18 MM	11583	XED16	EA		2	5	10	20	240	200	2	6
1491	P	0		5330-509-5356	GASKET: SPARK PLUG	11583	A676	EA		2	2	3	5	60	200	2	5
1492		0		5310-013-8542	WASHER, LOCK: CABLE CLAMP ATTACHMENT			EA		1	*	*	*	*	*	2	2
1493		0		5310-582-9930	WASHER, LOCK: MAGNETO MTG	66289	PE76A	EA		2	*	*	*	*	*	22	2
1494		0		5310-595-7237	WASHER, LOCK: MAGNETO MTG	66289	PE56A	EA		1	*	*	*	*	*	22	45
1495					GROUP 22 - BODY CHASSIS OR HULL AND ACCESSORY ITEMS												
1495A					2210 - DATA PLATES												
1496	X2	0		2805-685-6019	PLATE, INSTRUCTION: ENGINE OPERATION	66289	SD153	EA		1	*	*	*	*	*		
1497	X2	0			PLATE, INSTRUCTION: MILITARY STANDARD PARTS	66289	SD197A	EA		1	*	*	*	*	*		
1498	X2	0			PLATE, NAME: MAGNETO	79575	8792	EA		1	*	*	*	*	*		
1499		0		5305-335-4180	SCREW, DRIVE: NAMEPLATE MTG	79575	5250	EA		2	*	*	*	*	*		

LINE NO.	(1) SOURCE, MAINT. AND RECOV. CODE (a) SOURCE	(b) MAINT.	(c) RECOV.	(2) FEDERAL STOCK NUMBER	(3) DESCRIPTION	MANUFACTURER'S CODE	MANUFACTURER'S PART NUMBER	(4) UNIT OF ISSUE	(5) QTY INC IN UNIT PACK	(6) QTY INC IN UNIT	(7) 30-DAY DS GS MAINT. ALW. (a) 1-20	(b) 21-50	(c) 51-100	(8) 1-YR. ALW. PER. 100 EQUIP. CTYSCY. PLANNING	(9) DEPOT MAINT. ALW. PER. 100 EQUIP.	(10) ILLUSTRATION (a) FIG. NO.	(b) ITEM OR STM. NO.
1500					GROUP 57 - SPRAY EQUIPMENT COMPONENTS												
1500A					5703 - AIR BLOWER ASSEMBLY												
1501	X2	0			FILTER, SILENCER: AIR BLOWER	00736	BW8GS	EA		1	*	*	*	*	*	32	
1502	X1				BODY, FILTER	00736	BW8GS825	EA		1						32	5
1503	X2	0			ELEMENT, FILTER SILENCER	00736	BW8-826	EA		1	*	*	*	*	*	32	6
1504	P	0		3740-542-3716	GASKET: ELEMENT TO BODY AND TOP	00736	10M06	EA		2	*	2	2	20	10	32	4
1505		0		5310-010-3129	NUT, PLAIN, WING: TOP TO BODY	00736	39SYZ20	EA		1	*	*	*	*	*	32	1
1506	X2	0			TOP ASSEMBLY	00736	BW8-800	EA		1	*	*	*	*	*	32	8
1507	M	0			FELT: TOP ASSEMBLY	00736	540-16	EA		1						32	7
					MANUFACTURE FROM:												
1507A	P	0		5330-191-1096	FELT SHEET (7 IN. BY 7 IN. REQUIRED)			SH			SEE GRP 9501						
1508		0		5310-366-6294	WASHER, FLAT: TOP TO BODY			EA		1	*	*	*	*	*	32	3
1509		0		5310-013-8542	WASHER, LOCK: TOP TO BODY	66289	PE80A	EA		1	*	*	*	*	*	32	2
1510					5704 - SPRAY DUCTS AND MANIFOLDS												
1511	X2	0			MANIFOLD SPRAY ASSEMBLY	81336	D13200E5341	EA		1	*	*	*	*	*		
1512	X2	0			CLAMP, DRUM	81336	C13200E5358	EA		5	*	*	*	*	*	34	2
1513	X2	0			ELBOW, LONG	81336	B13200E5350	EA		1	*	*	*	*	*	34	10
1514	X2	0			ELBOW, SHORT	81336	B13200E535W	EA		1	*	*	*	*	*	34	11
1515	X2	0			END CAP	81336	B13200E5347	EA		2	*	*	*	*	*	34	1
1516	X2	0			NOZZLE HEAD	81336	C13200E5342	EA		1	*	*	*	*	*	34	4
1517	X2	0			SCREW, TOGGLE: CLAMP DRUM CLAMPING	81336	A13200E5359	EA		5	*	*	*	*	*	34	3
1518	X2	0		3440-977-8672	NOZZLE ASSEMBLY: SPRAY			EA		10	*	*	*	*	*	34	16
1519					GROUP 76 - FIRE FIGHTING EQUIPMENT COMPONENTS												
1519A					7603 - FIRE EXTINGUISHERS												
1520	X2	0			BRACKET, MOUNTING: EXTINGUISHER	23838	49717	EA		1	*	*	*	*	*		
1521	X2	0			EXTINGUISHER, FIRE	23838	PDC21-2P	EA		1	*	*	*	*	*		
1522		0		5310-616-6949	NUT, PLAIN, HEXAGON: BRACKET MTG			EA		4	*	*	*	*	*		
1523		0		5305-010-0959	SCREW, MACHINE: BRACKET MTG			EA		4	*	*	*	*	*		
1524	X2	0			WASHER, LOCK: BRACKET MTG	96906	MS35333-21	EA		8	*	*	*	*	*		
1525					GROUP 95 - GENERAL USE STANDARDIZED PARTS												
1525A					9501 - BULK MATERIAL												
1526	P	0		5330-191-1096	FELT SHEET			SH			*	*	*	5	1		

LINE NO.	(1) SOURCE, MAINT. AND RECOV. CODE (a) SOURCE	(b) MAINT.	(c) RECOV.	(2) FEDERAL STOCK NUMBER	(3) DESCRIPTION	MANUFACTURER'S CODE	MANUFACTURER'S PART NUMBER	(4) UNIT OF ISSUE	(5) QTY INC IN UNIT PACK	(6) QTY INC IN UNIT	(7) 30-DAY DS/GS MAINT. ALW. (a) 1-20	(b) 21-50	(c) 51-100	(8) 1-YR. ALW. PER. 100 EQUIP. CTY/GCY. PLANNING	(9) DEPOT MAINT. ALW. PER. 100 EQUIP.	(10) ILLUSTRATION (a) FIG. NO.	(b) ITEM OR SYM. NO.
1527					PART V												
1527A					GROUP 01 - ENGINE												
1527B					0100 - ENGINE ASSEMBLY												
1528	X2	F			ENGINE, GASOLINE	66289	210068	EA		1	*	*	*	*	*		
1529		F		5305-527-4195	SCREW, CAP, HEXAGON HEAD: ENGINE MTG	96906	MS35291-115	EA		4	*	*	*	*	*	11	3
1530		F		5310-011-5551	WASHER, LOCK: ENGINE MTG			EA		4	*	*	*	*	*	11	4
1531					0101 - CRANKCASE, BLOCK, CYLINDER HEAD												
1532	X2	H	R		BLOCK ASSEMBLY, CYLINDER	66289	AA86A5S1	EA		1	*	*	*	*	*	6	4
1533	P	F		2805-309-8040	SEAT, VALVE	66289	HG227D	EA		4	SEE GRP 0105 PART I						
1534		O		5307-011-2572	STUD, PLAIN: MANIFOLD MTG	66289	PC110	EA		2	SEE GRP 0108 PART I						
1535	X2	O			EXTENSION, OIL DRAIN	82254	CFR40975	EA		1	*	*	*	*	*		
1536					0102 - CRANKSHAFT												
1537	X2	O			SHEAVE, CRANKSHAFT: BLOWER DRIVE	71176	3TB60	EA		1	*	*	*	*	*	4	4
1538					0105 - VALVES, CAMSHAFTS AND TIMING SYSTEM												
1539	P	H		2805-536-9753	LIFTER, VALVE	66289	F66	EA		4	*	*	2	8	20	7	9
1540					0106 - ENGINE LUBRICATION SYSTEM												
1541		O		4730-278-4323	ADAPTER, STRAIGHT, PIPE TO TUBE: TEE TO GOVERNOR OIL LINE	66289	RF269	EA		1	*	*	*	*	*	10	16
1542		O		5306-543-4308	BOLT, MACHINE: FILTER MTG			EA		4	*	*	*	*	*	10	22
1543	X2	O		2940-358-2536	FILTER, FLUID, PRESSURE	66289	RV28	EA		1	*	*	*	*	*	10	
1544	X1				BODY, ASSEMBLY	73370	5310	EA		1						10	20
1545	X2	O		2940-393-5988	COVER ASSEMBLY	73370	5241	EA		1	*	*	*	*	*	10	14
1546	X1				COVER, FILTER	73370	102033	EA		1						10	10
1547	X2	O		5330-056-9588	GASKET: FIBER	73370	102032	EA		1	*	*	*	*	*	10	9
1548	X1				HANDLE ASSEMBLY	73370	8112	EA		1						10	7
1549	X2	O			RING, SNAP	73370	102483	EA		1	*	*	*	*	*	10	11
1550	X2	O		5310-417-8620	WASHER, SHOULDERED, HELICAL SPRING	73370	10776	EA		1	*	*	*	*	*	10	13
1551	X2	O			SPRING, COMPRESSION	73370	10208	EA		1	*	*	*	*	*	10	12
1552	P	O		5330-298-0776	WASHER, NONMETALLIC: COVER SCREW	73370	10076	EA		1	*	2	2	15	100	10	8
1553	P	O		2940-141-9025	FILTER ELEMENT	73370	C21P2	EA		1	13	25	50	600	100	10	23
1554	P	O		5330-599-1285	GASKET, COVER WASHER, NONMETALLIC	73370	11582	EA		1	13	25	50	600	100	10	6
1555		O		5310-368-1908	NUT, PLAIN, SQUARE: OIL FILTER STRAP	73370	13446	EA		1	*	*	*	*	*	10	5

LINE NO.	(1) SOURCE, MAINT. AND RECOV. CODE (a) SOURCE	(b) MAINT.	(c) RECOV.	(2) FEDERAL STOCK NUMBER	(3) DESCRIPTION	MANUFACTURER'S CODE	MANUFACTURER'S PART NUMBER	(4) UNIT OF ISSUE	(5) QTY. INC IN UNIT PACK	(6) QTY INC IN UNIT	(7) 30-DAY DS/GS MAINT. ALW. (a) 1-20	(b) 21-50	(c) 51-100	(8) 1-YR. ALW. PER. 100 EQUIP. CTY.GCY. PLANNING	(9) DEPOT MAINT. ALW. PER. 100 EQUIP.	(10) ILLUSTRATION (a) FIG. NO.	(b) ITEM OR SYM. NO.
1556		0		5305-013-3083	SCREW, MACHINE: OIL FILTER STRAP	73370	12398	EA		1	*	*	*	*	*	10	21
1557	X2	0		2940-732-4214	STRAP: OIL FILTER MTG	73370	11563	EA		1	*	*	*	*	*	10	3
1558		0		5310-013-8542	WASHER, LOCK: OIL FILTER STRAP	73370	10124	EA		1	*	*	*	*	*	10	4
1559		0		5310-176-8160	NUT, PLAIN, HEXAGON: FILTER MTG			EA		4	*	*	*	*	*	10	1
1560		0		4730-603-4470	TEE, PIPE: OIL FILTER INLET	66289	RF1301	EA		1	*	*	*	*	*	10	15
1561	X2	0		2940-542-3807	TUBE ASSEMBLY, OIL	66289	RMT319G	EA		1	*	*	*	*	*	10	25
1562		0		5310-596-4911	WASHER, LOCK: FILTER MTG	66289	PE4	EA		4	*	*	*	*	*	10	2
1562A					GROUP 03 - FUEL SYSTEM												
1563					0306 - TANKS, LINES, FITTINGS												
1564	X2	0			CLIP, FUEL LINE	82254	CFA40970	EA		1	*	*	*	*	*		
1565	X2	0			NUT: CLIP SCREW	82254	CFA40974	EA		1	*	*	*	*	*		
1566	X2	0			SCREW: CLIP MTG	82254	CFA40972	EA		1	*	*	*	*	*		
1567		0		5310-595-7235	WASHER, LOCK: CLIP MTG	96906	MS35333-20	EA		1	*	*	*	*	*		
1568					0309 - FUEL FILTERS												
1569	X2	0		4730-639-9638	STRAINER ASSEMBLY	66289	LP43	EA		1	*	*	*	*	*		
1570	X1			2910-382-8768	BAIL ASSEMBLY	78489	OW447	EA		1						16	20
1571	P	0		2910-354-3834	BOWL, SEDIMENT: GLASS	78480	06137	EA		1	2	2	3	30	10	16	19
1572	X1			2910-305-5749	COVER, STRAINER	78480	07770	EA		1						16	16
1573	P	0		2910-142-2738	STRAINER ELEMENT, SEDIMENT	78470	OW352	EA		1	*	*	2	10	20	16	17
1574	X1			2910-368-6657	VALVE, FUEL REGULATING: SHUT OFF	78480	07769	EA		1						16	21
1575	P	0		5330-187-2962	WASHER, NONMETALLIC	78480	06096	EA		1	4	8	17	200	100	16	18
1575A					GROUP 04 - EXHAUST SYSTEM												
1576					0401 - MUFFLER AND PIPES												
1577	X2	0			GUARD, MUFFLER	82254	CFR40870	EA		1	*	*	*	*	*		
1578		0		5310-584-5005	NUT, PLAIN, HEXAGON: MUFFLER GUARD TO CANOPY	96906	MS35690-405	EA		4	*	*	*	*	*		
1579		0		5305-637-4028	SCREW, CAP, HEXAGON HEAD: MUFFLER GUARD TO CANOPY	96906	MS35291-3	EA		4	*	*	*	*	*		
1580		0		5310-011-5544	WASHER, LOCK: MUFFLER GUARD TO CANOPY	96906	MS35333-40	EA		8	*	*	*	*	*		
1581					GROUP 05 - COOLING SYSTEM												
1581A					0502 - DEFLECTORS, SHROUDS												
1582		F		5306-019-3988	BOLT, MACHINE: FLYWHEEL SHROUD MTG	66289	XD13	EA		3	*	*	*	*	*	18	10
1583	X2	F			SHROUD, FLYWHEEL	66289	SE135AH	EA		1	*	*	*	*	*	18	8
1584		F		5310-596-4911	WASHER, LOCK: FLYWHEEL SHROUD MTG	66289	PE4	EA		3	*	*	*	*	*	18	9

LINE NO.	(1) SOURCE, MAINT. AND RECOV. CODE (a) SOURCE	(b) MAINT.	(c) RECOV.	(2) FEDERAL STOCK NUMBER	(3) DESCRIPTION	MANUFACTURER'S CODE	MANUFACTURER'S PART NUMBER	(4) UNIT OF ISSUE	(5) QTY INC IN UNIT PACK	(6) QTY INC IN UNIT	(7) 30-DAY DS/GS MAINT. ALW. (a) 1-20	(b) 21-50	(c) 51-100	(8) 1-YR. ALW. PER. 100 EQUIP. CTYGCY. PLANNING	(9) DEPOT MAINT. ALW. PER. 100 EQUIP.	(10) ILLUSTRATION (a) FIG. NO.	(b) ITEM OR SYM. NO.
1585					GROUP 06 - ELECTRICAL SYSTEM												
1585A					0605 - IGNITION COMPONENTS												
1586	P	O	R	2920-979-3504	MAGNETO (INCLUDES COMPONENTS OF REPAIR KIT, STOCK No. 2920-844-2035)	66289	Y93DS1	EA		1	*	*	2	10	2		
1587	X1				CAP, END: MAGNETO	82796	NY2430A	EA		1						36	7
1588	X1				COIL, MAGNETO	82796	QT2477C	EA		1						35	16
1589	X1				FERRULE	82796	M1077	EA		1							
1590	X1				HOUSING: MAGNETO	82796	HU2452	EA		1						35	1
1591	X1				OUTLET, CABLE	82796	Z2474	EA		1						36	6
1592	X2	O			PLATE, NAME: MAGNETO	82796	A195	EA		1	SEE GRP 2210						
1593	X1				ROTOR, MAGNETIC	82796	XS2480	EA		1						35	30
1594	X1			5305-042-0450	SCREW: CONDENSER TERMINAL	82796	6S6U	EA		1							
1595	X1				SCREW: CONTACT SUPPORT	82796	8S5U	EA		2						36	18
1596	X1			5305-010-0749	SCREW, MACHINE: BREAKER ARM TERMINAL	82796	8S4U	EA		1						36	21
1597					SCREW, MACHINE: CABLE OUTLET No. 8-32 x 7/16 IN.	82796	8S7K	EA		1						35	29
1598	X1			5305-012-1832	SCREW, MACHINE: CONDENSER MTG	82796	6S6D	EA		2						36	17
1599	X1				SCREW: WASHER RETAINING, 8-32 x 3/8 IN.	82796	8S6N	EA		1							
1600	X1			5305-543-2281	SETSCREW: COIL BRIDGE	82796	31SS12B	EA		2						35	26
1601	X1				SWITCH, COMPLETE GROUND	82796	JX2514C	EA		1						36	14
1602	X1			5310-794-8554	WASHER, LOCK: RETAINING WASHER SCREW	82796	8LW6	EA								35	28
1603	X1				NUT, GROUND SWITCH	82796	D2735A	EA		1						36	13
1604	X1				PLUNGER, GROUND SWITCH	82796	CW2514	EA		1						36	12
1605	X1				SPRING, GROUND SWITCH	82796	E2513A	EA		1						36	11
1606	X1				COUPLING, IMPULSE	82796	ZV2563C	EA		1						35	
1607	X1				COUPLING, HUB ASSEMBLY	82796	WY2563	EA		1						35	7
1608	X1				SHELL, COUPLING	82796	AZ5957	EA		1						35	9
1609	X1			2920-428-7583	SPRING, COUPLING DRIVE	82796	E2565	EA		1						35	8
1610	X1			2920-428-7572	SPRING, PAWL	82796	C5963	EA		1						35	27
1611	X1			2920-602-4258	BEARING, CAM END	82796	D5949A	EA		1						35	19
1612	X1			3110-144-8998	BEARING, DRIVE END	82796	C5949	EA		1						35	13
1613	X1			2920-286-2712	BUSHING: GEAR COUPLING	82796	F2572	EA		1						35	11
1614	X1				BUTTON, GROUND SWITCH	82796	C2741	EA		1							
1615	X1			2920-831-1171	COVER, VENT	82796	B6030A	EA		2						35	24
1616	X1			5315-715-1699	KEY: ROTOR SHAFT TO IMPULSE COUPLING	82796	3K1	EA		1						35	15
1617	X1			5310-336-7158	NUT, CASTELLATED, HEXAGON: COUPLING	82796	M2570	EA		1						35	12
1618	X1			5305-206-8263	SCREW, MACHINE: BEARING SUPPORT	82796	8S6G	EA		4						35	21
1619	X1				SCREW, VENT: No. 6-32 x 1/4 IN.	82796	6S4U	EA		2						35	23
1620	X1			5305-206-0169	SETSCREW: COUPLING PAWL STOP PIN	82796	A2568	EA		1						35	2
1621	X1			2920-537-1330	SPRING, COIL LEAD	82796	B3967	EA		2						35	17
1622	X1			2920-354-0766	SUPPORT, BEARING	82796	BY4631	EA		1						35	20
1623	X1				WASHER: COUPLING PLATE	82796	B2665K	EA		1						35	10

LINE NO.	(1) SOURCE, MAINT. AND RECOV. CODE (a) SOURCE	(b) MAINT.	(c) RECOV.	(2) FEDERAL STOCK NUMBER	(3) DESCRIPTION	MANUFACTURER'S CODE	MANUFACTURER'S PART NUMBER	(4) UNIT OF ISSUE	(5) QTY INC IN UNIT PACK	(6) QTY INC IN UNIT	(7) 30-DAY DS/GS MAINT. ALW. (a) 1-20	(b) 21-50	(c) 51-100	(8) 1-YR. ALW. PER. 100 EQUIP. CTYCCY. PLANNING	(9) DEPOT MAINT. ALW. PER. 100 EQUIP.	(10) ILLUSTRATION (a) FIG. NO.	(b) ITEM OR SYM. NO.
1624	X1			5310-186-7410	WASHER, FLAT: CONTACT SUPPORT MTG	82796	B5969	EA		2						36	19
1625	X1			2920-354-0750	WICK AND HOLDER, CAM	82796	G2788	EA		1						35	22
1626	X1			5335-830-9983	WIRE, FABRIC, VENT	82796	C60328	EA		2						35	25
1627	X1			2920-360-8381	GASKET: MAGNETO MTG (COMPONENT OF GASKET SET, STOCK NO. 2805-720-4773, SEE GROUP 0100, PART 1) (CAN BE MANUFACTURED FROM PAPER, STOCK NO. 5330-233-5846)	66289	QD616	EA		1						36	3
1628	X2	0		2990-603-4773	GEAR, HELICAL: DRIVE	66289	GD93C3	EA		1	*	*	*	*	*	36	4
1629		0		5310-012-0377	NUT, PLAIN, HEXAGON: MAGNETO MTG			EA		1						36	24
1630		0		5315-011-2726	PIN, COTTER: DRIVE GEAR			EA		1	*	*	*	*	*	36	23
1631		0		5305-514-9662	SCREW, CAP, HEXAGON HEAD: MAGNETO MTG			EA		2	*	*	*	*	*	36	1
1632		0		5310-582-9930	WASHER, LOCK: MAGNETO MTG	66289	PE76A	EA		2	*	*	*	*	*	36	2
1633		0		5310-595-7237	WASHER, LOCK: MAGNETO MTG	66289	PE56A	EA		1	*	*	*	*	*	36	22
1634	P	0		2920-844-2035	REPAIR KIT, MAGNETO	82796	SK72	EA		1	2	3	5	60	2		
1635	X1			2920-142-1888	ARM, CONTACT SET, DISTRIBUTOR	82796	Q2437A	EA		1						36	20
1636	X1			5340-675-5253	CLIP, RETAINING	82796	C1498G	EA		1						36	9
1637	X1			5340-598-3180	CLIP, RETAINING: ROTOR DRIVE SHAFT	82796	B1498D	EA		1						35	3
1638	X1				CONDENSER	82796	QX2433	EA		1						36	16
1639	X1			2920-217-3489	GASKET: END CAP	82796	N2498	EA		1						36	5
1640	X1			5305-281-6387	SCREW, CAP END	82796	N10S10D	EA		4						36	8
1641	X1				SEAL, CONDENSER	82796	P2473	EA		1						36	15
1642	X1			2920-356-1221	SEAL: ROTOR SHAFT	82796	G3861	EA		1						35	5
1643	X1				SPACER, GROUND SWITCH	82796	F4373	EA		1						36	10
1644	X1			5310-794-8555	WASHER, FLAT: RETAINING DRIVE END BEARING	82796	A2492D	EA		1						35	14
1645	X1			5310-205-7981	WASHER, FLAT: ROTOR SHAFT INNER SEAL	82796	A2492C	EA		1						35	4
1646	X1			5310-205-7981	WASHER: GREASE RETAINING INNER BEARING SUPPORT	82796	A2492C	EA		1						35	4
1647	X1				WASHER: GREASE RETAINING, OUTER BEARING SUPPORT	82796	E2493	EA		1						35	18
1648	X1			5310-285-1591	WASHER: ROTOR SHAFT OUTER SEAL	82796	A2492A	EA		1						35	6
1649	P	0		2920-887-1289	CABLE, IGNITION: SPARK PLUG	66289	YD30023	EA		2	*	*	2	10	10	2	4
1650	X2	0			CLAMP, CABLE: SPARK PLUG WIRES	66289	PG559	EA		2	*	*	*	*	*	2	1
1651		0		5305-013-1238	SCREW, MACHINE: CABLE CLAMP MTG	66289	XA33	EA		2	*	*	*	*	*	2	3
1652	P	0		2920-841-1890	SPARK PLUG	11583	XMD18	EA		2	5	10	20	240	200	2	6
1653		0		5310-013-8542	WASHER, LOCK: CABLE CLAMP MTG			EA		1	*	*	*	*	*	2	2
1654	P	0		5330-599-5356	GASKET: SPARK PLUG	11583	A676	EA		2	2	3	5	60	200	2	5
1655					GROUP 22 - BODY CHASSIS OR HULL AND ACCESSORY ITEMS												
1655A					2210 - DATA PLATES												
1656	X2	0			PLATE, INSTRUCTION: ENGINE OPERATION	66289	SD252	EA		1	*	*	*	*	*		
1657	X2	0			PLATE, INSTRUCTION: MILITARY STANDARD PARTS	66289	SD197B	EA		1	*	*	*	*	*		

LINE NO.	(1) SOURCE, MAINT. AND RECOV. CODE (a) SOURCE	(b) MAINT.	(c) RECOV.	(2) FEDERAL STOCK NUMBER	(3) DESCRIPTION	MANUFACTURER'S CODE	MANUFACTURER'S PART NUMBER	(4) UNIT OF ISSUE	(5) QTY INC IN UNIT PACK	(6) QTY INC IN UNIT	(7) 30-DAY DS/GS MAINT. ALW. (a) 1-20	(b) 21-50	(c) 51-100	(8) 1-YR. ALW. PER. 100 EQUIP. CTYGCY. PLANNING	(9) DEPOT MAINT. ALW. PER. 100 EQUIP.	(10) ILLUSTRATION (a) FIG. NO.	(b) ITEM OR SYM. NO.
1658	X2	0			PLATE, NAME: MAGNETO	82976	A195	EA		1	*	*	*	*	*		
1659		0		5305-335-4180	SCREW, DRIVE: NAMEPLATE MTG	79575	5250	EA		2	*	*	*	*	*		
1660					GROUP 57 - SPRAY EQUIPMENT COMPONENTS												
1660A					5703 - AIR BLOWER ASSEMBLY												
1661	X2	0			ADAPTER: OVERBOARD OIL DRAIN	04255	3200X6	EA		1	*	*	*	*	*		
1662		0		4730-230-1924	ELBOW: OVERBOARD OIL DRAIN	04255	3400X6	EA		1	*	*	*	*	*		
1663	X2	0			FILTER, SILENCER: AIR BLOWER	82254	CFN40566	EA		1	*	*	*	*	*	37	
1664	X1				BODY, FILTER	82254	CFN40998	EA		1						37	1
1665	X2	0			BOLT, MACHINE: TOP	82254	G427585	EA		1	*	*	*	*	*	37	5
1666	X2	0			ELEMENT, FILTER STRAINER	00736	BW8-826	EA		1	*	*	*	*	*	37	2
1667	X2	0			TOP ASSEMBLY	00736	BW8-800	EA		1	*	*	*	*	*	37	3
1668		0		5310-227-6566	WASHER, FLAT: TOP			EA		1	*	*	*	*	*	37	4
1669					5704 - SPRAY DUCTS AND MANIFOLDS												
1670	X2	0			MANIFOLD SPRAY ASSEMBLY	81336	D13200E5341	EA		1	*	*	*	*	*		
1671	X2	0			CLAMP, DRUM	81336	C13200E5358	EA		5	*	*	*	*	*	34	2
1672	X2	0			ELBOW, LONG	81336	D13200E5350	EA		1	*	*	*	*	*	34	10
1673	X2	0			ELBOW, SHORT	81336	D13200E5353	EA		1	*	*	*	*	*	34	11
1674	X2	0			END CAP	81336	B13200E5347	EA		2	*	*	*	*	*	34	1
1675	X2	0			NOZZLE HEAD	81336	C13200E5342	EA		1	*	*	*	*	*	34	4
1676	X2	0			SCREW, TOGGLE: CLAMP DRUM CLAMPING	81336	A13200E5359	EA		5	*	*	*	*	*	34	3
1677	X2	0			NOZZLE ASSEMBLY: SPRAY	82254	CFA40961	EA		10	*	*	*	*	*	34	16
1678	X1				HUB ASSEMBLY	82254	CFA40964	EA		10							
1679	X1				IMPELLER: SPRAY NOZZLE	87373	ZW5139	EA		10							
1680	X1				NUT, SELF-LOCKING, HEXAGON: FACE PLATE SCREW	82254	CFA40963	EA		20							
1681	X1				PLATE, FACE	87373	ZW5155	EA		10							
1682	X1				SCREW, MACHINE: FACE PLATE TO NOZZLE, No. 4-40 THD SIZE, 3/4 IN. LG	82254	CFA40962	EA		20							
1683					5708 - TANKS, VALVES, LINES HOSES, FITTINGS AND LIQUID STRAINERS												
1684	X2	0			CLIP, HOSE	82254	CFA40971	EA		2	*	*	*	*	*		
1685	X2	0			NUT, PLAIN, HEXAGON: CLIP MTG	82254	CFA40974	EA		2	*	*	*	*	*		
1686	X2	0			SCREW, MACHINE: CLIP MTG 6-32 x 1/2, RDHD	82254	CFA40972	EA		2	*	*	*	*	*		
1687		0		5310-595-7235	WASHER, LOCK: CLIP MTG	96906	MS35333-20	EA		2	*	*	*	*	*		

LINE NO.	(1) SOURCE, MAINT. AND RECOV. CODE (a) SOURCE	(b) MAINT.	(c) RECOV.	(2) FEDERAL STOCK NUMBER	(3) DESCRIPTION	MANUFACTURER'S CODE	MANUFACTURER'S PART NUMBER	(4) UNIT OF ISSUE	(5) QTY INC IN UNIT PACK	(6) QTY INC IN UNIT	(7) 30-DAY DS/GS MAINT. ALW. (a) 1-20	(b) 21-50	(c) 51-100	(8) 1-YR. ALW. PER. 100 EQUIP. CTYGCY. PLANNING	(9) DEPOT MAINT. ALW. PER. 100 EQUIP.	(10) ILLUSTRATION (a) FIG. NO.	(b) ITEM OR SYM. NO.
1688					PART VI												
1688A					GROUP 01 - ENGINE												
1688B					0100 - ENGINE ASSEMBLY												
1689	X2	F			ENGINE, GASOLINE	66289	210058	EA		1	*	*	*	*	*		
1690		F		5305-527-4195	SCREW, CAP, HEXAGON HEAD: ENGINE MTG	96906	MS35291-115	EA		4	*	*	*	*	*	11	3
1691		F		5310-011-5551	WASHER, LOCK: ENGINE MTG			EA		4	*	*	*	*	*	11	4
1692					0101 - CRANKCASE, BLOCK, CYLINDER HEAD												
1693	X2	H	R		BLOCK ASSEMBLY, CYLINDER	66289	AA86A551	EA		1	*	*	*	*	*	6	4
1694	P	F		2805-309-8040	SEAT, VALVE	66289	HG227D	EA		4	SEE GRP 0105 PART I						
1695		O		5307-011-2572	STUD, PLAIN: MANIFOLD MTG	66289	PC110	EA		2	SEE GRP 0108 PART I						
1696	X2	O			EXTENSION, OIL DRAIN	82294	CFR40975	EA		1	*	*	*	*	*		
1697					0102 - CRANKSHAFT												
1698	X2	O			SHEAVE, CRANKSHAFT: BLOWER DRIVE	71176	3TB60	EA		1	*	*	*	*	*	4	4
1699					0105 - VALVES, CAMSHAFTS AND TIMING SYSTEM												
1700	P	H		2805-536-8753	LIFTER, VALVE	66289	F66	EA		4	*	*	2	8	20	7	9
1701					0106 - ENGINE LUBRICATION SYSTEM												
1702		O		4730-278-4323	ADAPTER, STRAIGHT, PIPE TO TUBE: TEE TO GOVERNOR OIL LINE	66289	RF269	EA		1	*	*	*	*	*	10	16
1703		O		5306-543-4308	BOLT, MACHINE: FILTER MTG			EA		4	*	*	*	*	*	10	22
1704	X2	O		2940-358-2536	FILTER, FLUID, PRESSURE	66289	RV28	EA		1	*	*	*	*	*	10	
1705	X1				BODY, ASSEMBLY	73370	5310	EA		1						10	20
1706	X2	O		2940-393-5988	COVER ASSEMBLY	73370	5241	EA		1	*	*	*	*	*	10	14
1707	X1				COVER, FILTER	73370	102033	EA		1						10	10
1708	X2	O		5330-056-9588	GASKET: FIBER	73370	102032	EA		1	*	*	*	*	*	10	9
1709	X1				HANDLE ASSEMBLY	73310	8112	EA		1						10	7
1710	X2	O			RING, SNAP	73370	102483	EA		1	*	*	*	*	*	10	11
1711	X2	O		5310-417-8620	WASHER, SHOULDERED	73370	10776	EA		1	*	*	*	*	*	10	13
1712	X2	O			SPRING, COMPRESSION	73370	10208	EA		1	*	*	*	*	*	10	12
1713	P	O		5330-298-0776	WASHER, NONMETALLIC: COVER SCREW	73370	10076	EA		1	*	2	2	15	100	10	8
1714	P	O		2940-141-9025	FILTER ELEMENT	73370	C21P2	EA		1	13	25	50	600	100	10	23
1715	P	O		5330-599-1285	GASKET, COVER WASHER, NONMETALLIC	73370	11582	EA		1	13	25	50	600	100	10	6

LINE NO.	(1) SOURCE, MAINT. AND RECOV. CODE (a) SOURCE	(b) MAINT.	(c) RECOV.	(2) FEDERAL STOCK NUMBER	(3) DESCRIPTION	MANUFACTURER'S CODE	MANUFACTURER'S PART NUMBER	(4) UNIT OF ISSUE	(5) QTY INC IN UNIT PACK	(6) QTY INC IN UNIT	(7) 30-DAY DS. GS MAINT. ALW. (a) 1-20	(b) 21-50	(c) 51-100	(8) 1-YR. ALW. PER. 100 EQUIP. CTYGCY. PLANNING	(9) DEPOT MAINT. ALW. PER. 100 EQUIP.	(10) ILLUSTRATION (a) FIG. NO.	(b) ITEM OR SYM. NO.
1716		O		5310-368-1908	NUT, PLAIN, SQUARE: OIL FILTER STRAP	73370	13446	EA		1	*	*	*	*	*	10	5
1717		O		5305-013-3083	SCREW, MACHINE: OIL FILTER STRAP	73370	12398	EA		1	*	*	*	*	*	10	21
1718	X2	O		2940-732-4214	STRAP: OIL FILTER MTG	73370	11563	EA		1	*	*	*	*	*	10	3
1719		O		5310-013-8542	WASHER, LOCK: OIL FILTER STRAP	73370	10124	EA		1	*	*	*	*	*	10	4
1720		O		5310-176-8160	NUT, PLAIN, HEXAGON: FILTER MTG			EA		4	*	*	*	*	*	10	1
1721		C		4730-603-4470	TEE, PIPE: OIL FILTER INLET	66289	RF1301	EA		1	*	*	*	*	*	10	15
1722	X2	O		2940-542-3807	TUBE ASSEMBLY, OIL	66289	RM1319G	EA		1	*	*	*	*	*	10	25
1723		O		5310-596-4911	WASHER, LOCK: FILTER MTG	66289	PE4	EA		4	*	*	*	*	*	10	2
1723A					GROUP 03 - FUEL SYSTEM												
1724					0309 - FUEL FILTERS												
1725	X2	O		4730-639-9638	STRAINER ASSEMBLY	66289	LP43	EA		1	*	*	*	*	*		
1726	X1			2910-382-8768	BAIL ASSEMBLY	78480	OW447	EA		1						16	20
1727	P	O		2910-354-3834	BOWL, SEDIMENT: GLASS	78480	06137	EA		1	2	2	3	30	10	16	19
1728	X1			2910-305-5749	COVER, STRAINER	78480	07770	EA		1						16	16
1729	P	O		2910-142-2738	STRAINER ELEMENT, SEDIMENT	78480	OW352	EA		1	*	*	2	10	20	16	17
1730	X1			2910-368-6657	VALVE, FUEL REGULATING: SHUT OFF	78480	07769	EA		1						16	21
1731	P	O		5330-187-2962	WASHER, NONMETALLIC: BOWL MTG	78480	06096	EA		1	4	8	17	200	100	16	18
1732					GROUP 05 - COOLING SYSTEM												
1732A					0502 - DEFLECTORS, SHROUDS												
1733		F		5306-019-3988	BOLT, MACHINE: FLYWHEEL SHROUD MTG	66289	XD13	EA		3	*	*	*	*	*	18	10
1734	X2	F			SHROUD, FLYWHEEL	66289	SE135AH	EA		1	*	*	*	*	*	18	8
1735		F		5310-596-4911	WASHER, LOCK: FLYWHEEL SHROUD MTG	66289	PE4	EA		3	*	*	*	*	*	18	9
1736					GROUP 06 - ELECTRICAL SYSTEM												
1736A					0605 - IGNITION COMPONENTS												
1737	P	O	R	2920-979-3504	MAGNETO (INCLUDES COMPONENTS OF REPAIR KIT, STOCK NO. 2920-844-2035)	66289	Y93DS1	EA		1	*	*	2	10	2		
1738	X1				CAP, END: MAGNETO	82797	NY2430A	EA		1						36	7
1739	X1				COIL, MAGNETO	82796	QT2477C	EA		1						35	16
1740	X1				FERRULE	82796	M1077	EA		1							
1741	X1				HOUSING: MANGETO	82796	HU2452	EA		1						35	1
1742	X1				OUTLET, CABLE	82797	Z2474	EA		1						36	6
1743	X2	O			PLATE, NAME: MAGNETO	82796	A195	EA		1	SEE GRP 2210						
1744	X1				ROTOR, MAGNETIC	82796	XS2480	EA		1						35	30
1745	X1			5305-042-0450	SCREW: CONDENSER TERMINAL	82796	6S6U	EA		1							
1746	X1				SCREW: CONTACT SUPPORT	82696	8S5U	EA		2						36	18
1747	X1			5305-010-0749	SCREW, MACHINE: BREAKER ARM TERMINAL	82796	8S4U	EA		1						36	21
1748	X1				SCREW, MACHINE: CABLE OUTLET, NO. 8-32 x 7/16 IN.	82796	8S7K	EA		1						35	29

LINE NO.	(1) SOURCE, MAINT. AND RECOV. CODE (a) SOURCE	(b) MAINT.	(c) RECOV.	(2) FEDERAL STOCK NUMBER	(3) DESCRIPTION	MANUFACTURER'S CODE	MANUFACTURER'S PART NUMBER	(4) UNIT OF ISSUE	(5) QTY INC IN UNIT PACK	(6) QTY INC IN UNIT	(7) 30-DAY DS. GS MAINT. ALW. (a) 1-20	(b) 21-50	(c) 51-100	(8) 1-YR. ALW. PER. 100 EQUIP. CTYGCY. PLANNING	(9) DEPOT MAINT. ALW. PER. 100 EQUIP.	(10) ILLUSTRATION (a) FIG. NO.	(b) ITEM OR SYM. NO.
1749	X1			5305-012-1832	SCREW, MACHINE: CONDENSER MTG	82796	656D	EA		2						36	17
1750	X1				SCREW: WASHER RETAINING, 8-32 x 3/8 IN.	82697	856N	EA		1							
1751	X1			5305-543-2218	SETSCREW: COIL BRIDGE	82796	31SS12B	EA		2						35	26
1752	X1				SWITCH, COMPLETE GROUND	82796	JX2514C	EA		1						36	14
1753	X1			5310-794-8554	WASHER, LOCK: RETAINING WASHER SCREW	82796	8LW6	EA		1						35	28
1754	X1				NUT, GROUND SWITCH	82796	D2735A	EA		1						36	13
1755	X1				PLUNGER, GROUND SWITCH	82796	CW2514	EA		1						36	12
1756	X1				SPRING, GROUND SWITCH	82796	E2513A	EA		1						36	11
1757	X1				COUPLING, IMPULSE	72987	ZV2563C	EA		1						35	
1758	X1				COUPLING, HUB ASSEMBLY	82796	WY2563	EA		1						35	7
1759	X1				SHELL, COUPLING	82796	AZ5957	EA		1						35	9
1760	X1			2920-428-7583	SPRING, COUPLING DRIVE	82796	E2565	EA		1						35	8
1761	X1			2920-428-7572	SPRING, PAWL	82796	C5963	EA		1						35	27
1762	X1			2920-602-4258	BEARING, CAM END	82796	D5949A	EA		1						35	19
1763	X1			3110-144-8988	BEARING, DRIVE END	82796	C5949	EA		1						35	13
1764	X1			2920-286-2712	BUSHING: GEAR COUPLING	82796	F2572	EA		1						35	11
1765	X1				BUTTON, GROUND SWITCH	82796	C2741	EA		1							
1766	X1			2920-831-1171	COVER, VENT	82796	B6030A	EA		2						35	24
1767	X1			5315-715-1699	KEY: ROTOR SHAFT TO IMPULSE COUPLING	82796	3K1	EA		1						35	15
1768	X1			5310-336-7158	NUT, CASTELLATED, HEXAGON: COUPLING	82796	M2570	EA		1						35	12
1769	X1			5305-206-8263	SCREW, MACHINE: BEARING SUPPORT	82796	856G	EA		4						35	21
1770	X1				SCREW, VENT: No. 6-32 x 1/4	82796	654U	EA		2						35	23
1771	X1			5305-206-0169	SETSCREW: COUPLING PAWL STOP PIN	82796	A2568	EA		1						35	2
1772	X1			2920-537-1330	SPRING, COIL LEAD	82796	B3967	EA		2						35	17
1773	X1			2920-354-0766	SUPPORT, BEARING	82796	BY4631	EA		1						35	20
1774	X1				WASHER: COUPLING PLATE	82796	B2665K	EA		1						35	10
1775	X1			5310-186-7410	WASHER, FLAT: CONTACT SUPPORT MTG	82796	B5969	EA		2						36	19
1776	X1			2920-354-0750	WICK AND HOLDER, CAM	82796	G2788	EA		1						35	22
1777	X1			5335-830-9983	WIRE FABRIC, VENT	82796	C6032B	EA		2						35	25
1778	X1			2920-360-8381	GASKET: MAGNETO MTG (COMPONENT OF GASKET SET, STOCK No. 2805-720-4773, SEE GROUP 0100, PART 1) (CAN BE MANUFACTURED FROM PAPER, STOCK No. 5330-233-5846)	66289	QD616	EA		1						36	3
1779	X2	0		2990-603-4773	GEAR, HELICAL: DRIVE	66289	GD93C3	EA		1	*	*	*	*	*	36	4
1780		0		5310-012-0377	NUT, PLAIN, HEXAGON: MAGNETO MTG			EA		1						36	24
1781		0		5315-011-2726	PIN, COTTER: DRIVE GEAR			EA		1	*	*	*	*	*	36	23
1782		0		5305-514-9662	SCREW, CAP, HEXAGON HEAD: MAGNETO MTG			EA		2	*	*	*	*	*	36	1
1783		0		5310-582-9930	WASHER, LOCK: MAGNETO MTG	66289	PE76A	EA		2	*	*	*	*	*	36	2
1784		0		5310-595-7237	WASHER, LOCK: MAGNETO MTG	66289	PE56A	EA		1	*	*	*	*	*	36	22
1785	P	0		2920-844-2035	REPAIR KIT, MAGNETO	82796	SK72	EA		1	2	3	5	60	2		
1786	X1			2920-142-1888	ARM, CONTACT SET, DISTRIBUTOR	82796	Q2437A	EA		1						36	20
1787	X1			5340-598-3180	CLIP, RETAINING: ROTOR DRIVE SHAFT	82796	B1498B	EA		1						35	3
1788	X1			5340-675-5253	CLIP, RETAINING: SWITCH	82796	C1498G	EA		1						36	9

LINE NO.	(1) SOURCE, MAINT. AND RECOV. CODE (a) SOURCE	(b) MAINT.	(c) RECOV.	(2) FEDERAL STOCK NUMBER	(3) DESCRIPTION	MANUFACTURER'S CODE	MANUFACTURER'S PART NUMBER	(4) UNIT OF ISSUE	(5) QTY INC IN UNIT PACK	(6) QTY INC IN UNIT	(7) 30-DAY DS/GS MAINT. ALW. (a) 1-20	(b) 21-50	(c) 51-100	(8) 1-YR. ALW. PER 100 EQUIP. CTY GCY. PLANNING	(9) DEPOT MAINT. ALW. PER. 100 EQUIP.	(10) ILLUSTRATION (a) FIG. NO.	(b) ITEM OR SYM. NO.
1789	X1				CONDENSER	82796	QX2433	EA		1						36	16
1790	X1			2910-217-3489	GASKET: END CAP	82796	N2498	EA		1						36	5
1791	X1			5305-281-6387	SCREW, CAP END	82796	10S10D	EA		4						36	8
1792	X1				SEAL, CONDENSER	82796	P2473	EA		1						36	15
1793	X1			2920-356-1221	SEAL: ROTOR SHAFT	82796	C3861	EA		1						35	5
1794	X1				SPACER, GROUND SWITCH	82796	F4373	EA		1						36	10
1795	X1			5310-794-8555	WASHER, FLAT: RETAINING DRIVE END BEARING	82796	A2492C	EA		1						35	14
1796	X1			5310-205-7981	WASHER, FLAT: ROTOR SHAFT INNER SEAL	82796	A2492C	EA		1						35	4
1797	X1			5310-205-7981	WASHER: GREASE RETAINING INNER BEARING SUPPORT	82796	A2492C	EA		1						35	4
1798	X1				WASHER: GREASE RETAINING, OUTER BEARING SUPPORT	82796	E2493	EA		1						35	18
1799	X1			5310-285-1591	WASHER: ROTOR SHAFT OUTER SEAL	82796	A2492A	EA		1						35	6
1800	P	0		2920-887-1289	CABLE, IGNITION: SPARK PLUG	66289	YD300-23	EA		2	*	*	2	10	10	2	4
1801	X2	0			CLAMP, CABLE: SPARK PLUG WIRES	66289	PG559	EA		2	*	*	*	*	*	2	1
1802		0		5305-013-1238	SCREW, MACHINE: CABLE CLAMP MTG	66289	XA33	EA		2	*	*	*	*	*	2	3
1803	P	0		2920-841-1890	SPARK PLUG	11583	XMD18	EA		2	5	10	20	240	200	2	6
1804		0		5310-013-8542	WASHER, LOCK: CABLE CLAMP MTG			EA		1	*	*	*	*	*	2	2
1805	P	0		5330-599-5356	GASKET: SPARK PLUG	11583	A676	EA		2	2	3	5	60	200	2	5
1806					GROUP 22 - BODY CHASSIS OR HULL AND ACCESSORY ITEMS												
1806A					2210 - DATA PLATES												
1807	X2	0			PLATE, INSTRUCTION: ENGINE OPERATION	66289	SD252	EA		1	*	*	*	*	*		
1808	X2	0			PLATE, INSTRUCTION: MILITARY STANDARD PARTS	66289	SD197B	EA		1	*	*	*	*	*		
1809	X2	0			PLATE, NAME: MAGNETO	82697	A195	EA		1	*	*	*	*	*		
1810		0		5305-335-4180	SCREW, DRIVE: NAMEPLATE MTG	79575	5250	EA		2	*	*	*	*	*		
1811					GROUP 57 - SPRAY EQUIPMENT COMPONENTS												
1811A					5703 - AIR BLOWER ASSEMBLY												
1812	X2	0			ADAPTER: OVERBOARD OIL DRAIN	04255	3200X6	EA		1	*	*	*	*	*		
1813	X2	0			ELBOW: OVERBOARD OIL DRAIN	04255	3400X6	EA		1	*	*	*	*	*		
1814	X2	0			FILTER, SILENCER: AIR BLOWER	82254	CFN40566	EA		1	*	*	*	*	*	37	
1815	X1				BODY, FILTER	82254	CFN40998	EA		1						37	1
1816	X2	0			BOLT, MACHINE: TOP	82254	G427585	EA		1	*	*	*	*	*	37	5
1817	X2	0			ELEMENT, FILTER STRAINER	00736	BWB826	EA		1	*	*	*	*	*	37	2
1818	X2	0			TOP ASSEMBLY	00736	BW8-800	EA		1	*	*	*	*	*	37	3
1819		0		5310-227-6566	WASHER, FLAT: TOP			EA		1	*	*	*	*	*	37	4

LINE NO.	(1) SOURCE, MAINT. AND RECOV. CODE (a) SOURCE	(b) MAINT.	(c) RECOV.	(2) FEDERAL STOCK NUMBER	(3) DESCRIPTION	MANUFACTURER'S CODE	MANUFACTURER'S PART NUMBER	(4) UNIT OF ISSUE	(5) QTY INC IN UNIT PACK	(6) QTY INC IN UNIT	(7) 30-DAY DS/GS MAINT. ALW. (a) 1-20	(b) 21-50	(c) 51-100	(8) 1-YR. ALW. PER. 100 EQUIP. CTYGCY. PLANNING	(9) DEPOT MAINT. ALW. PER. 100 EQUIP.	(10) ILLUSTRATION (a) FIG. NO.	(b) ITEM OR SYM NO.
1820					5704 - SPRAY DUCTS AND MANIFOLDS												
1821	X2	0			NOZZLE ASSEMBLY: SPRAY	82254	CFA40961	EA		10	*	*	*	*	*	34	16
1822	X1				HUB, ASSEMBLY	82254	CFA40964	EA		10							
1823	X1				IMPELLER: SPRAY NOZZLE	87373	ZW5139	EA		10							
1824	X1				NUT, SELF-LOCKING, HEXAGON: FACE PLATE SCREW	82254	CFA40963	EA		20							
1825	X1				PLATE, FACE	87373	ZW5155	EA		10							
1826	X1				SCREW, MACHINE: FACE PLATE TO NOZZLE, No. 4-40 THD SIZE, 3/8 IN. LG	82254	CFA40962	EA		20							
1827	X2	0			CLAMP ASSEMBLY: NOZZLE ASSEMBLY	82254	CFB55020	EA		3	*	*	*	*	*		
1828	X2	0			NOZZLE HEAD ASSEMBLY: SPRAY	82254	CFR41536	EA		1	*	*	*	*	*	38	
1829	X2	0			BODY: NOZZLE HEAD	82254	CFR41535-1	EA		1	*	*	*	*	*	38	1
1830	X2	0			COVER: NOZZLE HEAD	82254	CFR41535-5	EA		2	*	*	*	*	*	38	4
1831	P	0		5330-956-4307	GASKET, LONG: COVER MTG	82254	CFA41537	EA		4	2	2	3	40	10	38	2
1832	P	0		5330-925-0455	GASKET, SHORT: COVER MTG	82254	CFA41538	EA		4	2	2	3	40	10	38	3
1833	X2	0			SCREW, MACHINE: COVER MTG, 1/4-28 THD SIZE, 1/2 IN. LG	82254	CFA41100	EA		28	*	*	*	*	*	38	6
1834	X2	0			WASHER, LOCK: COVER MTG, 1/4 I.T.	96906	MS35333-25	EA		28	*	*	*	*	*	38	5
1835					GROUP 76 - FIRE FIGHTING EQUIPMENT COMPONENTS												
1835A					7603 - FIRE EXTINGUISHERS												
1836	X2	0			BRACKET, MOUNTING: FIRE EXTINGUISHER	23838	4971	EA		1	*	*	*	*	*		
1837	X2	0			EXTINGUISHER, FIRE	23838	23A9S	EA		1	*	*	*	*	*		
1838	X2	0			NUT, PLAIN, HEXAGON: BRACKET MTG, 1/4-20 THD SIZE	96906	MS35690-405	EA		2	*	*	*	*	*		
1839	X2	0			SCREW, MACHINE: BRACKET MTG, 1/4-20 x 1/2	96906	MS35291-4	EA		2	*	*	*	*	*		
1840	X2	0			WASHER, LOCK: BRACKET MTG, 1/4 IN. SCREW SIZE	96906	MS35333-23	EA		2	*	*	*	*	*		

LINE NO.	(1) SOURCE, MAINT. AND RECOV. CODE (a) SOURCE	(b) MAINT.	(c) RECOV.	(2) FEDERAL STOCK NUMBER	(3) DESCRIPTION	MANUFACTURER'S CODE	MANUFACTURER'S PART NUMBER	(4) UNIT OF ISSUE	(5) QTY INC IN UNIT PACK	(6) QTY INC IN UNIT	(7) 30-DAY DS, GS MAINT. ALW. (a) 1-20	(b) 21-50	(c) 51-100	(8) 1-YR. ALW. PER. 100 EQUIP. CTY GCY. PLANNING	(9) DEPOT MAINT. ALW. PER. 100 EQUIP.	(10) ILLUSTRATION (a) FIG. NO.	(b) ITEM OR SYM. NO.
1841					PART VII												
1841A					GROUP 01 - ENGINE												
1841B					0100 - ENGINE ASSEMBLY												
1842	X2	F			ENGINE, GASOLINE	66289	210068	EA		1	*	*	*	*	*		
1843		F		5305-527-4195	SCREW, CAP, HEXAGON HEAD: ENGINE MTG	96906	MS35291-115	EA		4	*	*	*	*	*	11	3
1844		F		5310-011-5551	WASHER, LOCK: ENGINE MTG			EA		4	*	*	*	*	*	11	4
1845					0101 - CRANKCASE, BLOCK, CYLINDER HEAD												
1846	X2	H	R		BLOCK ASSEMBLY, CYLINDER	66289	AA86ASS1	EA		1	*	*	*	*	*	6	4
1847	P	F		2805-309-8040	SEAT, VALVE	66289	HG227D	EA		4	SEE GRP 0105 PART I						
1848		O		5307-011-2572	STUD, PLAIN: MANIFOLD MTG	66289	PC110	EA		2	SEE GRP 0108 PART I						
1849	X2	O			EXTENSION, OIL DRAIN	82254	CF440974	EA		1	*	*	*	*	*		
1850					0102 - CRANKSHAFT												
1851	X2	O			SHEAVE, CRANKSHAFT: BLOWER DRIVE	71176	3TB60	EA		1	*	*	*	*	*	4	4
1852					0105 - VALVES, CAMSHAFTS AND TIMING SYSTEM												
1853	P	H		2805-536-8753	LIFTER, VALVE	66289	F66	EA		4	*	*	2	8	20	7	9
1854					0106 - ENGINE LUBRICATION SYSTEM												
1855		O		4730-278-4323	ADAPTER, STRAIGHT, PIPE TO TUBE: TEE TO GOVERNOR OIL LINE	66289	RF269	EA		1	*	*	*	*	*	10	16
1856		O		5306-543-4308	BOLT, MACHINE: FILTER MTG			EA		4	*	*	*	*	*	10	22
1857	X2	O		2940-358-2436	FILTER, FLUID, PRESSURE	66289	RV28	EA		1	*	*	*	*	*	10	
1858	X1			2940-358-2536	BODY, ASSEMBLY	73370	5310	EA		1						10	20
1859	X2	O		2940-393-5988	COVER ASSEMBLY	73370	5241	EA		1	*	*	*	*	*	10	14
1860	X1				COVER, FILTER	73370	102033	EA		1						10	10
1861	X2	O		5330-056-9588	GASKET: FIBER	73370	102032	EA		1	*	*	*	*	*	10	9
1862	X1				HANDLE ASSEMBLY	73370	8112	EA		1						10	7
1863	X2	O			RING, SNAP	73370	102483	EA		1	*	*	*	*	*	10	11
1864	X2	O		5310-417-8620	WASHER, SHOULDERED	73370	10776	EA		1	*	*	*	*	*	10	13
1865	X2	O			SPRING, COMPRESSION	73370	10208	EA		1	*	*	*	*	*	10	12
1866	P	O		5330-298-0776	WASHER, NONMETALLIC: COVER SCREW	73370	10076	EA		1	*	2	2	15	100	10	8
1867	P	O		2940-141-9025	FILTER ELEMENT	73370	C21P2	EA		1	13	25	50	600	100	10	23
1868	P	O		5330-599-1285	GASKET, COVER WASHER, NONMETALLIC	73370	11582	EA		1	13	25	50	600	100	10	6

LINE NO.	(1) SOURCE, MAINT. AND RECOV. CODE (a) SOURCE	(b) MAINT.	(c) RECOV.	(2) FEDERAL STOCK NUMBER	(3) DESCRIPTION	MANUFACTURER'S CODE	MANUFACTURER'S PART NUMBER	(4) UNIT OF ISSUE	(5) QTY INC IN UNIT PACK	(6) QTY INC IN UNIT	(7) 30-DAY DS/GS MAINT. ALW. (a) 1-20	(b) 21-50	(c) 51-100	(8) 1-YR. ALW. PER. 100 EQUIP. CTYOCY. PLANNING	(9) DEPOT MAINT. ALW. PER. 100 EQUIP.	(10) ILLUSTRATION (a) FIG. NO.	(b) ITEM OR SYM. NO.
1869		0		5310-368-1908	NUT, PLAIN, SQUARE: OIL FILTER STRAP	73370	13446	EA		1	*	*	*	*	*	10	5
1870		0		5305-013-3083	SCREW, MACHINE: OIL FILTER STRAP	73370	12398	EA		1	*	*	*	*	*	10	21
1871	X2	0		2940-732-4214	STRAP: OIL FILTER MTG	73370	11563	EA		1	*	*	*	*	*	10	3
1872		0		5310-013-8542	WASHER, LOCK: OIL FILTER STRAP	73370	10124	EA		1	*	*	*	*	*	10	4
1873		0		5310-176-8160	NUT, PLAIN, HEXAGON: FILTER MTG			EA		4	*	*	*	*	*	10	1
1874		0		4730-603-4470	TEE, PIPE: OIL FILTER INLET	66289	RF1301	EA		1	*	*	*	*	*	10	15
1875	X2	0		2940-542-3807	TUBE ASSEMBLY, OIL	77278	RM1319G	EA		1	*	*	*	*	*	10	25
1876		0		5310-596-4911	WASHER, LOCK: FILTER MTG	66289	PE4	EA		4	*	*	*	*	*	10	2
1876A					GROUP 03 - FUEL SYSTEM												
1877					0309 - FUEL FILTERS												
1878	X2	0		4730-639-9638	STRAINER ASSEMBLY	66289	LP43	EA		1	*	*	*	*	*		
1879	X1			2910-382-8768	BAIL ASSEMBLY	78480	OW447	EA		1						16	20
1880	P	0		2910-354-3834	BOWL, SEDIMENT: GLASS	78480	06137	EA		1	2	2	3	30	10	16	19
1881	X1			2910-305-5749	COVER, STRAINER	78480	07770	EA		1						16	16
1882	P	0		2910-142-2738	STRAINER ELEMENT, SEDIMENT	78480	OW352	EA		1	*	*	2	10	20	16	17
1883	X1			2910-368-6657	VALVE, FUEL REGULATING: SHUT OFF	78480	07769	EA		1						16	21
1884	P	0		5330-187-2962	WASHER, NONMETALLIC: BOWL MTG	78480	06096	EA		1	4	8	17	200	10	16	18
1885					GROUP 05 - COOLING SYSTEM												
1885A					0502 - DEFLECTORS, SHROUDS												
1886		F		5306-019-3988	BOLT, MACHINE: FLYWHEEL SHROUD MTG	66289	XD13	EA		3	*	*	*	*	*	18	10
1887	X2	F			SHROUD, FLYWHEEL	66289	SE135AH	EA		1	*	*	*	*	*	18	8
1888		F		5310-596-4911	WASHER, LOCK: FLYWHEEL SHROUD MTG	66289	PE4	EA		3	*	*	*	*	*	18	9
1889					GROUP 06 - ELECTRICAL SYSTEM												
1889A					0605 - IGNITION COMPONENTS												
1890	P	0	R	2920-979-3504	MAGNETO (INCLUDES COMPONENTS OF REPAIR KIT, STOCK NO. 2920-844-2035)	66289	Y93DS1	EA		1	*	*	2	10	2		
1891	X1				CAP, END: MAGNETO	82796	NY2430A	EA		1						36	7
1892	X1				COIL, MAGNETO	82796	QT2477C	EA		1						35	16
1893	X1				FERRULE	82796	M1077	EA		1							
1894	X1				HOUSING: MAGNETO	97296	HU2425	EA		1						35	1
1895	X1				OUTLET, CABLE	82796	Z2474	EA		1						36	6
1896	X2	0			PLATE, NAME: MAGNETO	82796	A195	EA		1	SEE	GRP	22	0			
1897	X1				ROTOR, MAGNETIC	82796	XS2480	EA		1						35	30
1898	X1			5305-042-0450	SCREW: CONDENSER TERMINAL	82796	6S6U	EA		1							
1899	X1				SCREW: CONTACT SUPPORT	82796	8S5U	EA		2						36	18

LINE NO.	(1) SOURCE, MAINT. AND RECOV. CODE (a) SOURCE	(b) MAINT.	(c) RECOV.	(2) FEDERAL STOCK NUMBER	(3) DESCRIPTION	MANUFACTURER'S CODE	MANUFACTURER'S PART NUMBER	(4) UNIT OF ISSUE	(5) QTY INC IN UNIT PACK	(6) QTY INC IN UNIT	(7) 30-DAY DS/GS MAINT. ALW. (a) 1-20	(b) 21-50	(c) 51-100	(8) 1-YR. ALW. PER 100 EQUIP. CTY/GCY. PLANNING	(9) DEPOT MAINT. ALW. PER. 100 EQUIP.	(10) ILLUSTRATION (a) FIG. NO.	(b) ITEM OR SYM. NO.
1900	X1			5305-010-0749	SCREW, MACHINE: BREAKER ARM TERMINAL	82796	8S4U	EA		1						36	21
1901	X1				SCREW, MACHINE: CABLE OUTLET No. 8-32 x 7/16 IN.	82796	8S7K	EA		1						35	29
1902	X1			5305-012-1832	SCREW, MACHINE: CONDENSER MTG	82796	6S6D	EA		2						36	17
1903	X1				SCREW: WASHER RETAINING, 8-32 x 3/8 IN.	82796	8S6N	EA		1							
1904	X1			5305-543-2281	SETSCREW: COIL BRIDGE	82796	31SS12B	EA		2						35	26
1905	X1				SWITCH COMPLETE GROUND	82796	JX2514C	EA		1						36	14
1906	X1			5310-794-8554	WASHER, LOCK: RETAINING WASHER SCREW	82796	8LW6	EA								35	28
1907	X1				NUT, GROUND SWITCH	82796	D2735A	EA		1						36	13
1908	X1				PLUNGER, GROUND SWITCH	82796	CW2514	EA		1						36	12
1909	X1				SPRING, GROUND SWITCH	82796	E2513A	EA		1						36	11
1910	X1				COUPLING, IMPULSE	82796	ZV2563C	EA		1						35	
1911	X1				COUPLING, HUB ASSEMBLY	82796	WY2563	EA		1						35	7
1912	X1				SHELL, COUPLING	82796	AZ5957	EA		1						35	9
1913	X1			2920-428-7583	SPRING, COUPLING DRIVE	82796	E2565	EA		1						35	8
1914	X1			2920-428-7572	SPRING, PAWL	82796	C5963	EA		1						35	27
1915	X1			2920-602-4258	BEARING, CAM END	82796	D5949A	EA		1						35	19
1916	X1			3110-144-8998	BEARING, DRIVE END	82796	C5949	EA		1						35	13
1917	X1			2920-286-2712	BUSHING: GEAR COUPLING	82796	F2572	EA		1						35	11
1918	X1				BUTTON, GROUND SWITCH	82796	C2741	EA		1							
1919	X1			2920-831-1171	COVER, VENT	82796	B6030	EA		2						35	24
1920	X1			5315-615-1699	KEY: ROTOR SHAFT TO IMPULSE COUPLING	82796	3K1	EA		1						35	15
1921	X1			5310-336-7158	NUT, CASTELLATED, HEXAGON: COUPLING	82796	M2570	EA		1						35	12
1922	X1			5305-206-8263	SCREW, MACHINE: BEARING SUPPORT	82796	8S6G	EA		4						35	21
1923	X1				SCREW, VENT: No. 6-32 x 1/4 IN.	82796	6S4U	EA		2						35	23
1924	X1			5305-206-0169	SETSCREW: COUPLING PAWL STOP	82796	A2568	EA		1						35	2
1925	X1			2920-537-1330	SPRING, COIL LEAD	82796	B3967	EA		2						35	17
1926	X1			2920-354-0766	SUPPORT, BEARING	82796	BY4631	EA		1						35	20
1927	X1				WASHER: COUPLING PLATE	82796	B2665K	EA		1						35	10
1928	X1			5310-186-7410	WASHER, FLAT: CONTACT SUPPORT MTG	82796	B5X69	EA		2						36	19
1929	X1			2920-354-0750	WICK AND HOLDER, CAM	82796	G2788	EA		1						35	22
1930	X1			5335-830-9983	WIRE, FABRIC, VENT	82796	C60328	EA		2						35	25
1931	X1			2920-360-8381	GASKET: MAGNETO MTG (COMPONENT OF GASKET SET, STOCK No. 2805-720-4773, SEE GROUP 0100, PART 1) (CAN BE MANUFACTURED FROM PAPER, STOCK No. 5330-233-5846)	66289	QD616	EA		1						36	3
1932	X2	0		2990-603-4773	GEAR, HELICAL: DRIVE	66289	GD93C3	EA		1	*	*	*	*	*	36	4
1933		0		5315-011-2726	PIN, COTTER: DRIVE GEAR			EA		1	*	*	*	*	*	36	23
1934		0		5310-012-0377	NUT, PLAIN, HEXAGON: MAGNETO MTG			EA		1	*	*	*	*	*	36	24
1935		0		5305-514-9662	SCREW, CAP, HEXAGON HEAD: MAGNETO MTG			EA		2	*	*	*	*	*	36	1
1936		0		5310-582-9930	WASHER, LOCK: MAGNETO MTG	66289	PE76A	EA		2	*	*	*	*	*	36	2
1937		0		5310-595-7237	WASHER, LOCK: MAGNETO MTG	66289	PE56A	EA		1	*	*	*	*	*	36	22
1938	P	0		2920-844-2035	REPAIR KIT, MAGNETO	82796	SK72	EA		1	2	3	5	60	2		
1939	X1			2920-142-1888	ARM, CONTACT SET, DISTRIBUTOR	82796	Q2437A	EA		1						36	20

LINE NO.	(1) SOURCE, MAINT. AND RECOV. CODE (a) SOURCE	(b) MAINT.	(c) RECOV.	(2) FEDERAL STOCK NUMBER	(3) DESCRIPTION	MANUFACTURER'S CODE	MANUFACTURER'S PART NUMBER	(4) UNIT OF ISSUE	(5) QTY INC IN UNIT PACK	(6) QTY INC IN UNIT	(7) 30-DAY DS/GS MAINT. ALW. (a) 1-20	(b) 21-50	(c) 51-100	(8) 1-YR. ALW. PER. 100 EQUIP. CTY.OCY. PLANNING	(9) DEPOT MAINT. ALW. PER. 100 EQUIP.	(10) ILLUSTRATION (a) FIG. NO.	(b) ITEM OR SYM. NO.
1940	X1			5340-598-3180	CLIP, RETAINING: ROTOR DRIVE SHAFT	82795	B1498D	EA		1						35	3
1941	X1			5340-675-5253	CLIP, RETAINING: SWITCH	82796	C1498G	EA		1						36	9
1942	X1				CONDENSER	82796	QX2433	EA		1						36	16
1943	X1			2920-217-3485	GASKET: IND CAP	82796	N2498	EA		1						36	5
1944	X1			5305-281-6387	SCREW, CAP END	82796	10S10D	EA		4						36	8
1945	X1				SEAL, CONDENSER	82796	P2473	EA		1						36	15
1946	X1			2920-356-1221	SEAL: ROTOR SHAFT	82796	G3861	EA		1						35	5
1947	X1				SPACER, GROUND SWITCH	82796	F4373	EA		1						36	10
1948	X1			5310-794-8555	WASHER, FLAT: RETAINING DRIVE END BEARING	82796	A2492D	EA		1						35	14
1949	X1			5310-205-7981	WASHER, FLAT: ROTOR SHAFT INNER SEAL	82796	A2492C	EA		1						35	4
1950	X1			5310-205-7981	WASHER: GREASE RETAINING INNER BEARING SUPPORT	82796	A2492C	EA		1						35	4
1951	X1				WASHER: GREASE RETAINING, OUTER BEARING SUPPORT	82976	E2493	EA		1						35	18
1952	X1			5310-285-1591	WASHER: ROTOR SHAFT OUTER SEAL	82796	A2492A	EA		1						35	5
1953	P	0		2920-887-1289	CABLE, IGNITION: SPARK PLUG	66289	YD300-23	EA		2	*	*	2	10	10	2	4
1954	X2	0			CLAMP, CABLE: SPARK PLUG WIRES	66289	PG559	EA		2	*	*	*	*	*	2	1
1955		0		5305-013-1238	SCREW, MACHINE: CABLE CLAMP MTG	66289	XA33	EA		2	*	*	*	*	*	2	3
1956	P	0		2920-841-1890	SPARK PLUG	11583	XMD18	EA		2	5	10	20	240	200	2	6
1957		0		5310-013-8542	WASHER, LOCK: CABLE CLAMP MTG			EA		1	*	*	*	*	*	2	2
1958	P	0		5330-599-5356	GASKET: SPARK PLUG	11583	A676	EA		2	2	3	5	60	200	2	5
1959					GROUP 22 - BODY CHASSIS OR HULL, AND ACCESSORY ITEMS												
1959A					2210 - DATA PLATES												
1960	X2	0			PLATE, INSTRUCTION: ENGINE OPERATION	66289	SD252	EA		1	*	*	*	*	*		
1961	X2	0			PLATE, INSTRUCTION: MILITARY STANDARD PARTS	66289	SD197B	EA		1	*	*	*	*	*		
1962	X2	0			PLATE, NAME: MAGNETO	82796	A195	EA		1	*	*	*	*	*		
1963		0		5305-335-4180	SCREW, DRIVE: NAME PLATE MTG	79575	5250	EA		2	*	*	*	*	*		
1964					GROUP 57 - SPRAY EQUIPMENT COMPONENTS												
1964A					5703 - AIR BLOWER ASSEMBLY												
1965	X2	0			ADAPTER: OVERBOARD OIL DRAIN	04255	3200X6	EA		1	*	*	*	*	*		
1966		0		4730-230-1924	ELBOW: OVERBOARD OIL DRAIN	04255	3400X6	EA		1	*	*	*	*	*		
1967	X2	0			FILTER, SILENCER: AIR BLOWER	82254	CFN40566	EA		1	*	*	*	*	*	37	
1968	X1				BODY, FILTER	82254	CFN40998	EA		1						37	1
1969	X2	0			BOLT, MACHINE: TOP	82254	G427585	EA		1	*	*	*	*	*	37	5
1970	X2	0			ELEMENT, FILTER, STRAINER	00736	BW8-826	EA		1	*	*	*	*	*	37	2

LINE NO.	(1) SOURCE, MAINT. AND RECOV. CODE (a) SOURCE	(b) MAINT.	(c) RECOV.	(2) FEDERAL STOCK NUMBER	(3) DESCRIPTION	MANUFACTURER'S CODE	MANUFACTURER'S PART NUMBER	(4) UNIT OF ISSUE	(5) QTY INC IN UNIT PACK	(6) QTY INC IN UNIT	(7) 30-DAY DS GS MAINT. ALW. (a) 1-20	(b) 21-50	(c) 51-100	(8) 1-YR. ALW. PER. 100 EQUIP. CTYGCY. PLANNING	(9) DEPOT MAINT. ALW. PER. 100 EQUIP.	(10) ILLUSTRATION (a) FIG. NO.	(b) ITEM OR SYM. NO.
1971	X2	0			TOP ASSEMBLY	00736	BW8-800	EA		1	*	*	*	*	*	37	3
1972		0		5310-227-6566	WASHER, FLAT: TOP			EA		1	*	*	*	*	*	37	4
1973					5704 - SPRAY DUCTS AND MANIFOLDS												
1974	X2	0			NOZZLE ASSEMBLY: SPRAY	82254	CFA40961	EA		10	*	*	*	*	*	34	16
1975	X1				HUB ASSEMBLY	82254	CFA40964	EA		10							
1976	X1				IMPELLER: SPRAY. NOZZLE	87373	ZW5139	EA		10							
1977	X1				NUT, SELF-LOCKING, HEXAGON: FACE PLATE SCREW	82254	CFA40963	EA		20							
1978	X1				PLATE, FACE	87373	ZW5155	EA		10							
1979	X1				SCREW, MACHINE: FACE PLATE TO NOZZLE, No. 4-40 THD SIZE, 3/4 IN. LG	82254	CFA40962	EA		20							
1980	X2	0			BODY: NOZZLE HEAD	82254	CFR41535-1	EA		1	*	*	*	*	*	38	1
1981	X2	0			CLAMP ASSEMBLY: NOZZLE ASSEMBLY	82254	CFB55020	EA		3	*	*	*	*	*		
1982	X2	0			COVER: NOZZLE HEAD	82254	CFR41535-5	EA		2	*	*	*	*	*	38	4
1983	P	0		5330-956-4306	GASKET, LONG: COVER MTG	82254	CFA41537	EA		4	2	2	3	40	10	38	2
1984	P	0		5330-925-0455	GASKET, SHORT: COVER MTG	82254	CFA41538	EA		4	2	2	3	40	10	38	3
1985	X2	0			NOZZLE HEAD ASSEMBLY: SPRAY	82254	CFR41536	EA		1	*	*	*	*	*	38	
1986	X2	0			SCREW, MACHINE: COVER MTG, 1/4-28 THD SIZE, 1/2 IN. LG	82254	CFA41100	EA		28	*	*	*	*	*	38	6
1987	X2	0			WASHER, LOCK: COVER MTG, 1/4 I.T.	96906	MS35333-25	EA		28	*	*	*	*	*	38	5

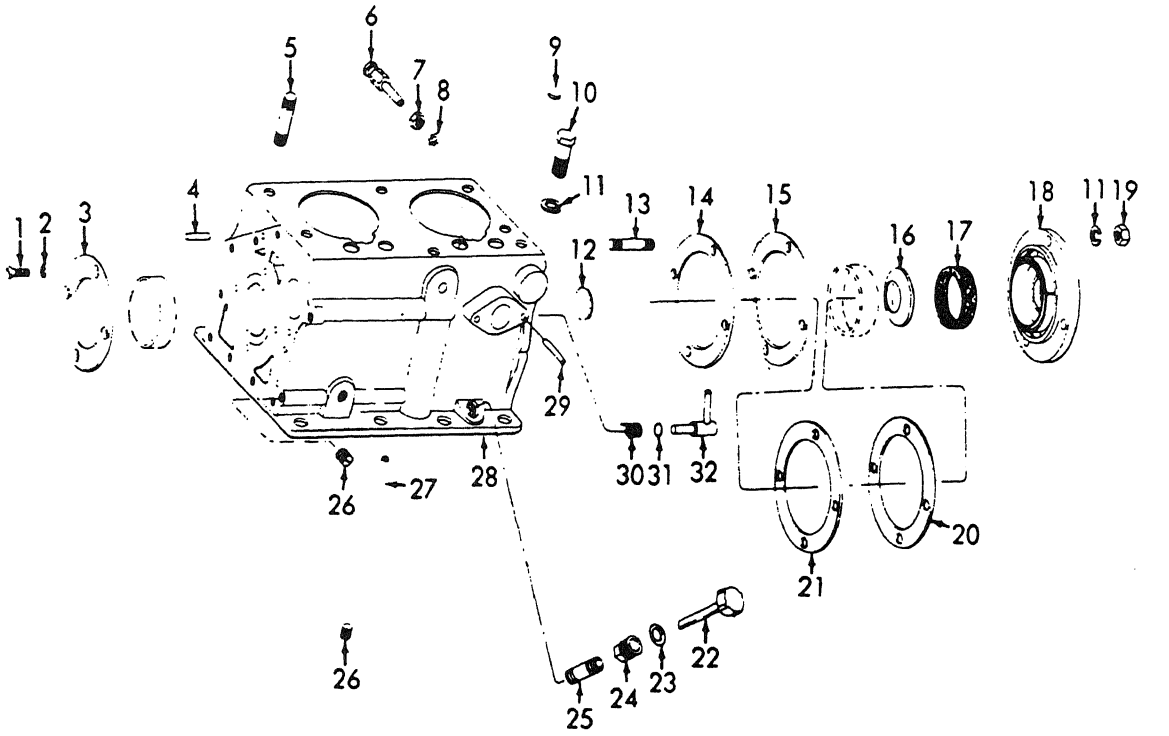

Figure 1. Crankcase and Related Parts.

INDEX TO PARTS, FIGURE 1

REF NO.	FUNCT GROUP	APPL PARTS	ITEM NAME	REF NO.	FUNCT GROUP	APPL PARTS	ITEM NAME	REF NO.	FUNCT GROUP	APPL PARTS	ITEM NAME
1	0102	1	SCREW	11	0106	1	WASHER	22	0106	1	GAGE-CP
2	0102	1	WASHER	12	0101	1	PLUG	23	0106	1	GASKET
3	0102	1	RETAINR	13	0102	1	STUD	24	0106	1	BODY
4	0105	1	PIN	14	0102	1	SHIM	25	0106	1	NIPPLE
5	0101	1	STUD	15	0102	1	GASKET	26	0101	1	PLUG
6	0101	1	NOZZLE	16	0102	1	RETAINR	27	0101	1	TUBE
7	0101	1	NUT	17	0102	1	SEAL	28	0101	1	CRNKCSE
8	0101	1	WASHER	18	0102	1	PLATE	29	0101	1	PIN
9	0101	1	PLUG	19	0102	1	NUT	30	0101	1	SPRING
10	0106	1	SCREW	20	0102	1	GASKET	31	0311	1	PACKING
11	0102	1	WASHER	21	0102	1	SHIM	32	0311	1	SHAFT

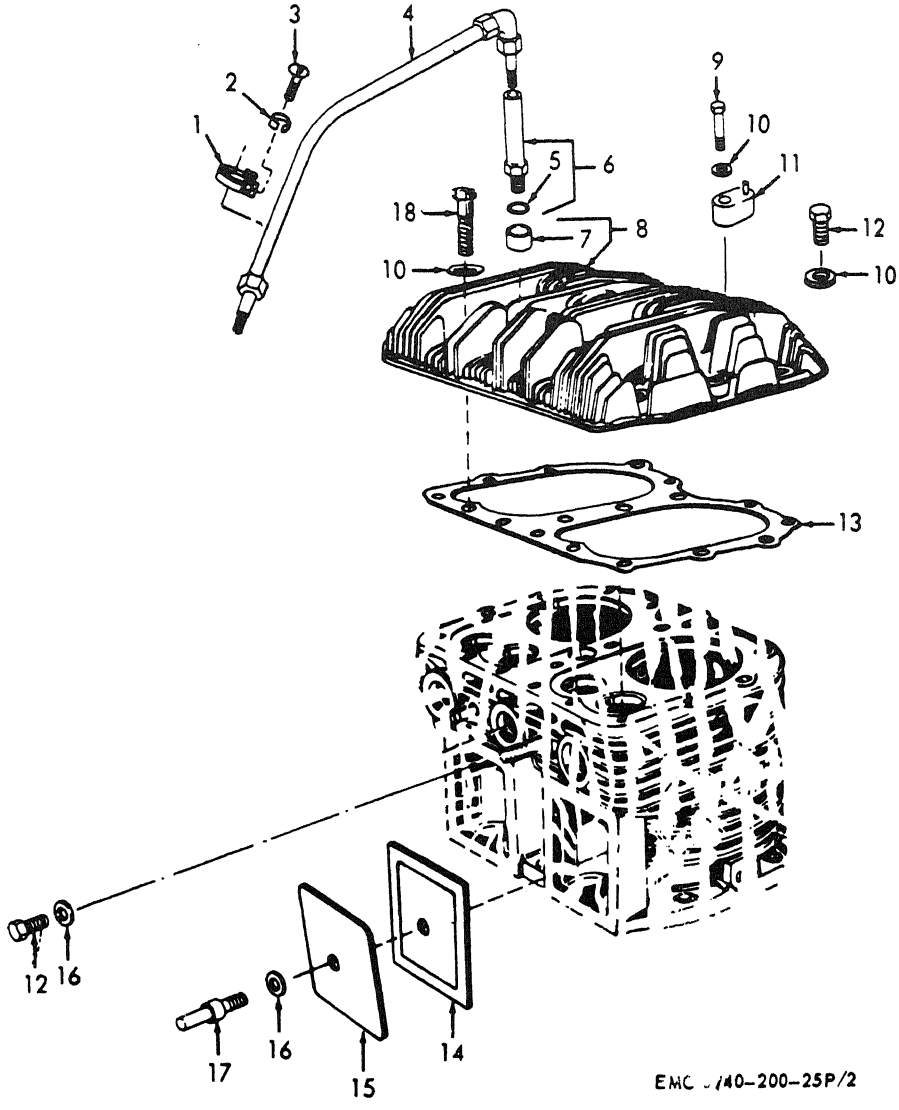

Figure 2. Cylinder Head and Related Parts.

INDEX TO PARTS, FIGURE 2

REF NO.	FUNCT GROUP	APPL PARTS	ITEM NAME	REF NO.	FUNCT GROUP	APPL PARTS	ITEM NAME	REF NO.	FUNCT GROUP	APPL PARTS	ITEM NAME
1	0605	2,3,4,5	CLAMP	5	0605	6,7	GASKET	12	0101	1	BOLT
1	0605	6,7	CLAMP	6	0605	2,3,4,5	SPK PLG	12	0105	1	BOLT
2	0605	2,3,4,5	WASHER	6	0605	6,7	SPK PLG	13	0101	1	GASKET
2	0605	6,7	WASHER	7	0101	1	INSERT	14	0105	1	GASKET
3	0605	2,3,4,5	SCREW	8	0101	1	CLDR HD	15	0105	1	PLATE.
3	0605	6,7	SCREW	9	0101	1	BOLT	16	0105	1	WASHER
4	0605	2,3,4,5	CABLE	10	0101	1	WASHER	17	0105	1	PIN
4	0605	6,7	CABLE	11	0606	1	SWITCH	18	0101	1	BOLT
5	0605	2,3,4,5	GASKET								

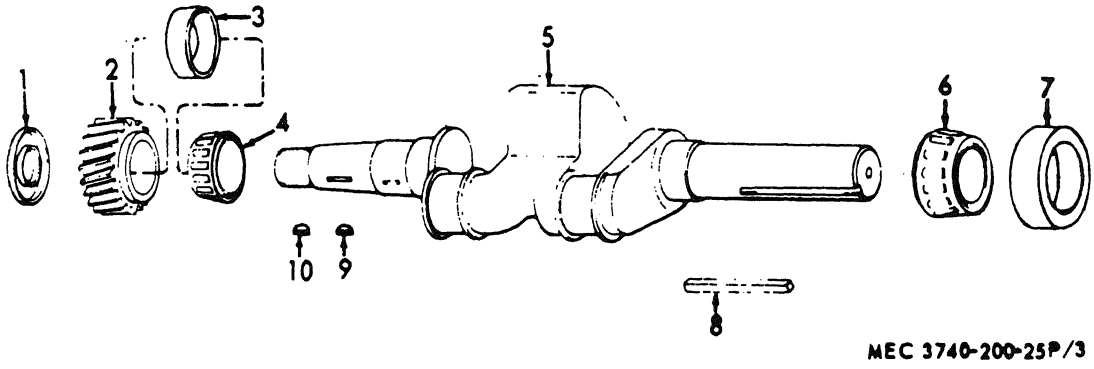

Figure 3. Crankshaft Assembly and Related Parts.

INDEX TO PARTS, FIGURE 3

REF NO.	FUNCT GROUP	APPL PARTS	ITEM NAME	REF NO.	FUNCT GROUP	APPL PARTS	ITEM NAME
1	0102	1	SLINGER	6	0102	1	CN-RLRS
2	0105	1	GEAR	7	0102	1	CUP
3	0102	1	CUP	8	0102	1	KEY
4	0102	1	CN-RLRS	9	0102	1	KEY
5	0102	1	CRKSHFT	10	0102	1	KEY

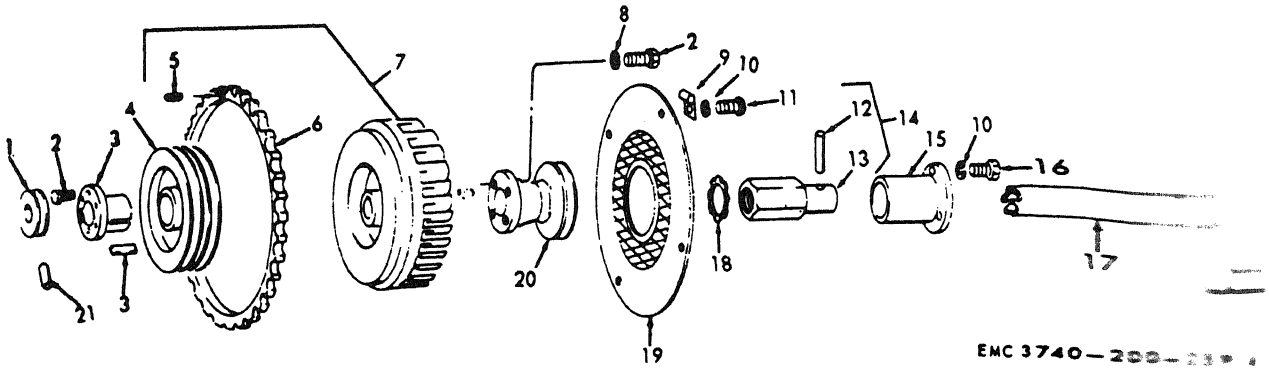

Figure 4. Flywheel, Pulleys and Related Parts.

INDEX TO PARTS, FIGURE 4

REF NO.	FUNCT GROUP	APPL PARTS	ITEM NAME	REF NO.	FUNCT GROUP	APPL PARTS	ITEM NAME	REF NO.	FUNCT GROUP	APPL PARTS	ITEM NAME
1	0102	1	SHEAVE	7	0103	1	FLYWHEL	14	0102	1	NUT AN
2	0102	1	BOLT	8	0103	1	WASHER	15	1501	1	BRACKET
2	0103	1	BOLT	9	0502	1	CLIP	16	1501	1	SCREW
3	0102	1	BUSHING	10	0502	1	WASHER	17	0107	1	CRANK
4	0102	2,3,4,5	SHEAVE	10	1501	1	WASHER	18	0102	1	WASHER
4	0102	6,7	SHEAVE	11	0502	1	SCREW	19	0502	1	SCREW
5	0103	1	SETSCRW	12	0102	1	PIN	20	0103	1	PULLEY
6	0103	1	GEAR	13	0102	1	NUT	21	0102	1	PIN

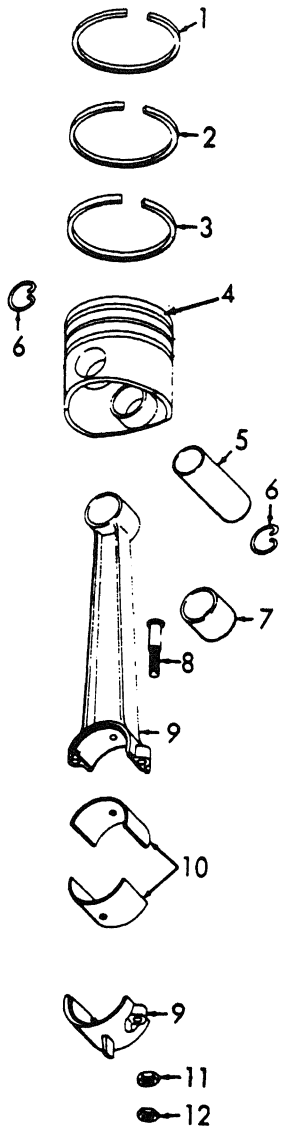

INDEX TO PARTS, FIGURE 5

REF NO.	FUNCT GROUP	APPL PARTS	ITEM NAME
1	0104	1	RING
2	0104	1	RING
3	0104	1	RING
4	0104	1	PISTON
5	0104	1	PIN
6	0104	1	RING
7	0104	1	BEARING
8	0104	1	BOLT
9	0104	1	ROD
10	0104	1	BEARING
11	0104	1	NUT
12	0104	1	NUT

MEC 3740-200-25P/5

Figure 5. Piston and Connecting Rod.

INDEX TO PARTS, FIGURE 6

REF NO.	FUNCT GROUP	APPL PARTS	ITEM NAME
1	0105	1	VALVE
2	0105	1	GUIDE
3	0105	1	SEAT
4	0101	2,3,4,5	BLCK AY
4	0101	6,7	BLCK AY
5	0101	1	NUT
6	0101	1	WASHER
7	0101	1	GASKET
8	0105	1	SPRING
9	0105	1	SEAT
10	0105	1	RETAINR
11	0105	1	CAP
12	0108	1	STUD

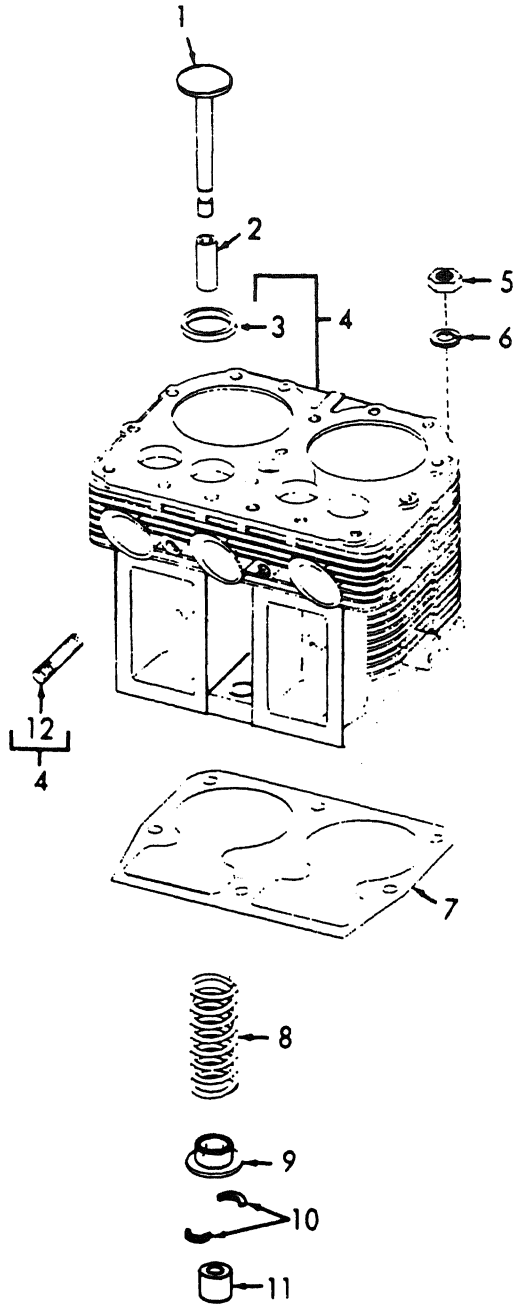

EMC 3740-200-25P/6

Figure 6. Block Assembly, Valve, Spring and Related Parts.

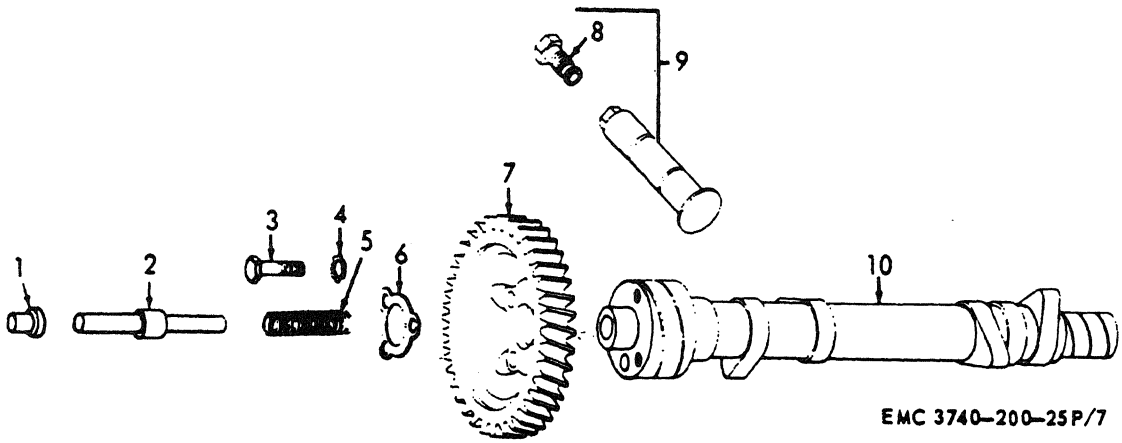

Figure 7. Camshaft and Related Parts.

INDEX TO PARTS, FIGURE 7

REF NO.	FUNCT GROUP	APPL PARTS	ITEM NAME	REF NO.	FUNCT GROUP	APPL PARTS	ITEM NAME
1	0105	1	PIN	7	0105	1	GEAR
2	0105	1	PLUNGER	8	0105	2,4	SCREW
3	0105	1	BOLT	9	0105	2,3,4,5	LIFTER
4	0105	1	WASHER	9	0105	6,7	LIFTER
5	0105	1	SPRING	10	0105	1	CAMSHFT
6	0105	1	PLATE				

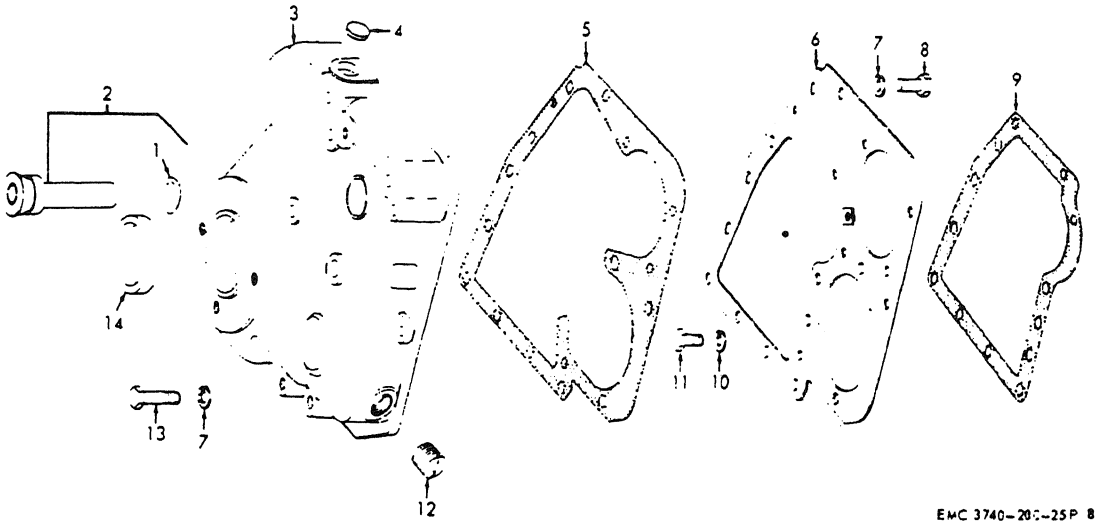

Figure 8. Timing Gear Cover and Related Parts.

INDEX TO PARTS, FIGURE 8

REF NO.	FUNCT GROUP	APPL PARTS	ITEM NAME	REF NO.	FUNCT GROUP	APPL PARTS	ITEM NAME
1	0308	1	PACKING	8	01C5	1	BOLT
2	0308	1	SHAFT	9	0105	1	GASKET
3	0105	1	COVER	10	0105	1	WASHER
4	0105	1	PLUG	11	0105	1	SCREW
5	0105	1	GASKET	12	0105	1	PLUG
6	0105	1	SPACER	13	0105	1	BOLT
7	0105	1	WASHER	14	01C2	1	SEAL

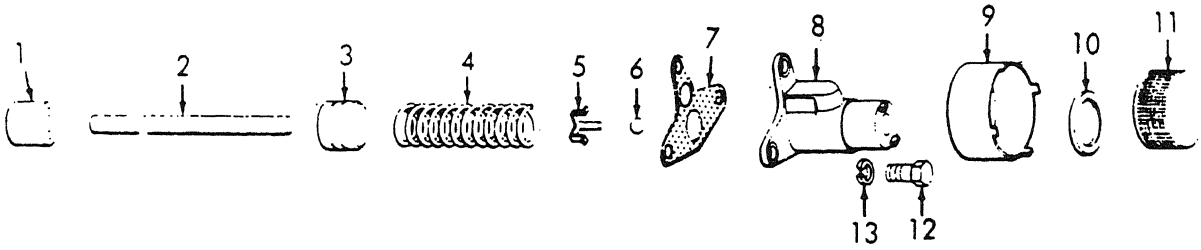

EMC 3740-200-25P/9

Figure 9. Oil Pump.

INDEX TO PARTS, FIGURE 9

REF NO.	FUNCT GROUP	APPL PARTS	ITEM NAME	REF NO.	FUNCT GROUP	APPL PARTS	ITEM NAME
1	0106	1	CAP	8	0106	1	BODY
2	0106	1	ROD	9	0106	1	CUP
3	0106	1	PLUNGER	10	0106	1	WASHER
4	0106	1	SPRING	11	0106	1	STRAINR
5	0106	1	RETAINR	12	0106	1	SCREW
6	0106	1	BALL	13	0106	1	WASHER
7	0106	1	GASKET				

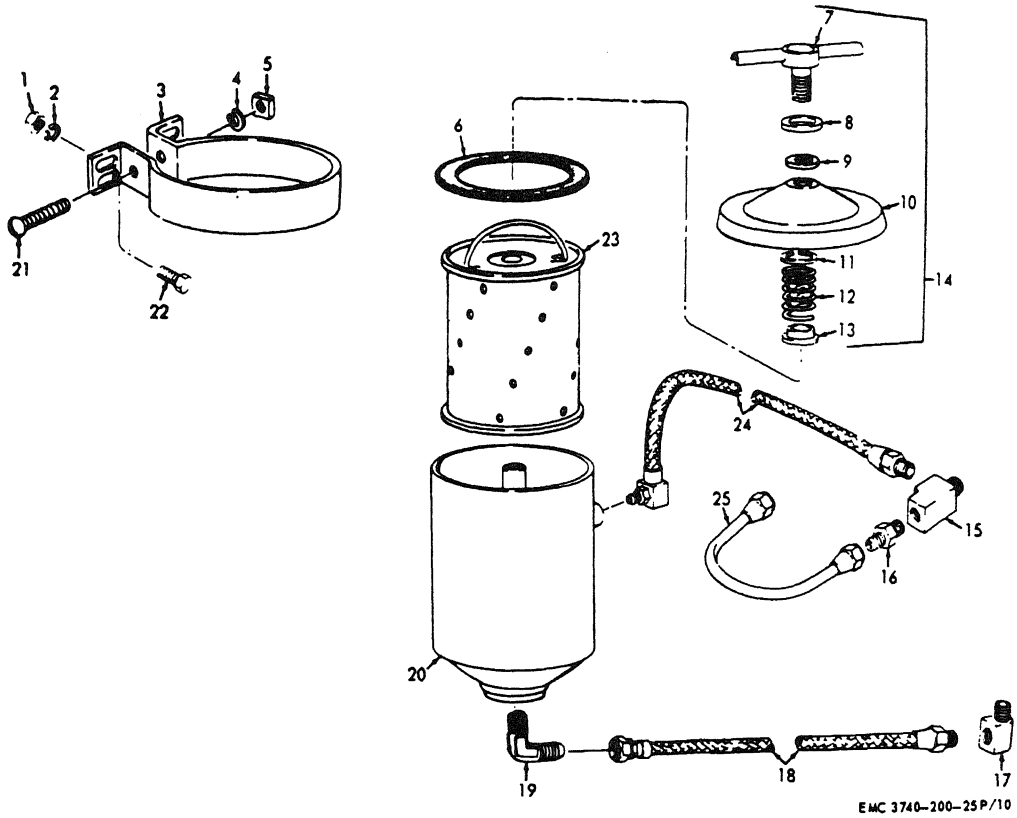

Figure 10. Oil Filter Assembly.

INDEX TO PARTS, FIGURE 10

REF NO.	FUNCT GROUP	APPL PARTS	ITEM NAME
1	0106	2,3,4,5	NUT
1	0106	6,7	NUT
2	0106	2,3,4,5	WASHER
2	0106	6,7	WASHER
3	0106	2,3,4,5	STRAP
3	0106	6,7	STRAP
4	0106	2,3,4,5	WASHER
4	0106	6,7	WASHER
5	0106	2,3,4,5	NUT
5	0106	6,7	NUT
6	0106	2	WASHER
6	0106	3	GASKET
6	0106	4	WASHER
6	0106	5,6,7	GASKET
7	0106	2,3,4,5	HANDLE
7	0106	6,7	HANDLE
8	0106	2,3,4,5	WASHER
8	0106	6,7	WASHER
9	0106	2,3,4,5	GASKET
9	0106	6,7	GASKET
10	0106	2,3,4,5	COVER
10	0106	6,7	COVER
11	0106	2,3,4,5	RING
11	0106	6,7	RING
12	0106	2,3,4,5	SPRING
12	0106	6,7	SPRING
13	0106	2,3,4,5	WASHER
13	0106	6,7	WASHER
14	0106	2,3,4,5	COVER
14	0106	6,7	COVER
15	0106	2,3,4,5	TEE
15	0106	6,7	TEE
16	0106	2,3,4,5	ADAPTER
16	0106	6,7	ADAPTER
17	0106	1	ELBOW
18	0106	1	LINE AY
19	0106	1	ELBOW
20	0106	2,3,4,5	BODY AY
20	0106	6,7	BODY AY
21	0106	2,3,4,5	SCREW
21	0106	6,7	SCREW
22	0106	2,3,4,5	BOLT
22	0106	6,7	BOLT
23	0106	2,3,4,5	FTR LMT
23	0106	6,7	FTR LMT
24	0106	2,4	HOSE AY
25	0106	2	LINE AY
25	0106	3	TUBE AY
25	0106	4	LINE AY
25	0106	5,6,7	TUBE AY

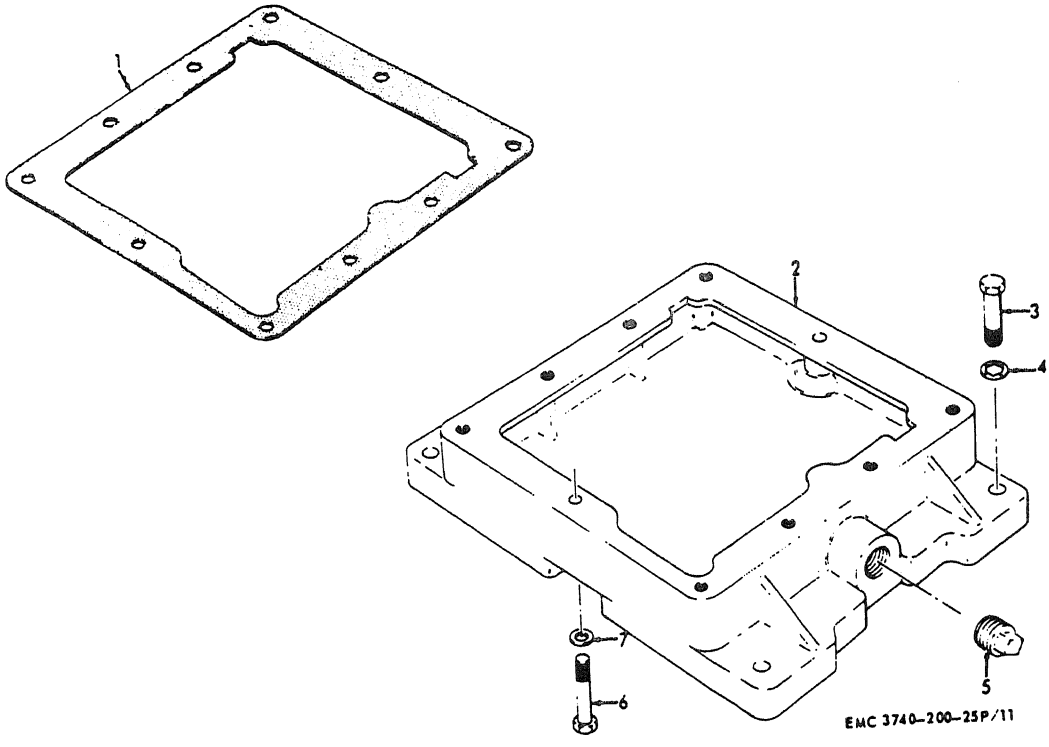

Figure 11. Oil Pan Engine Base.

INDEX TO PARTS, FIGURE 11

REF NO.	FUNCT GROUP	APPL PARTS	ITEM NAME
1	0106	1	GASKET
2	0106	1	BASE
3	0100	2,3,4,5	SCREW
3	0100	6,7	SCREW
4	0100	2,3,4,5	WASHER
4	0100	6,7	WASHER
5	0106	1	PLUG
6	0106	1	SCREW
7	0106	1	WASHER

INDEX TO PARTS, FIGURE 12

REF NO.	FUNCT GROUP	APPL PARTS	ITEM NAME
1	0304	1	NUT
2	0304	1	WASHER
3	0304	1	FTR-CAP
4	0304	1	GASKET
5	0304	1	CUP AY
6	0304	1	GASKET
7	0304	1	AR CLNR
8	0304	1	STUD
9	0304	1	BRACKET
10	0304	1	BOLT
11	0304	1	WASHER
12	0106	1	GASKET
13	0106	1	BREATHR
14	0304	1	GASKET
15	0304	1	CLAMP
16	0304	1	HOSE

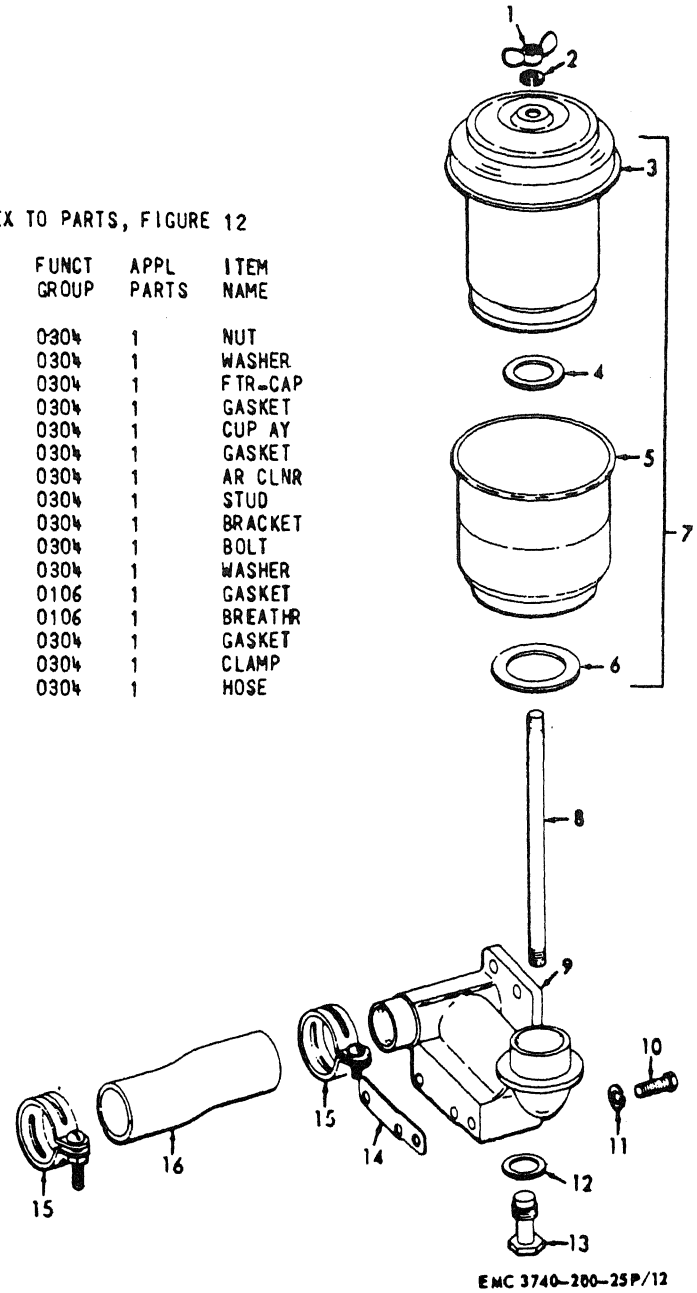

Figure 12. Air Cleaner and Related Parts.

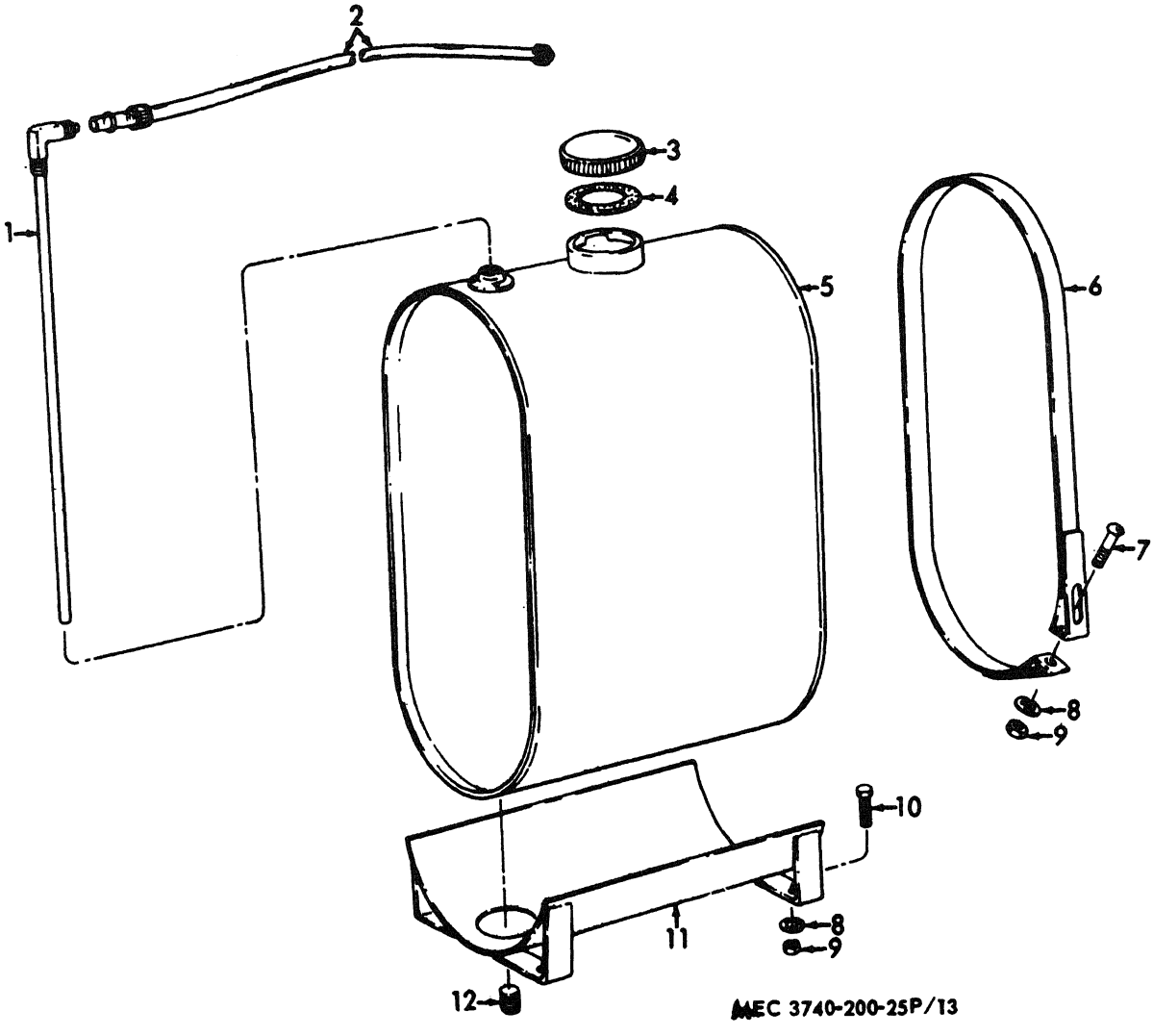

Figure 13. Fuel Tank and Related Parts.

INDEX TO PARTS, FIGURE 13

REF NO.	FUNCT GROUP	APPL PARTS	ITEM NAME	REF NO.	FUNCT GROUP	APPL PARTS	ITEM NAME
1	0306	1	TUBE	7	0306	1	SCREW
2	0306	1	LINE	8	0306	1	WASHER
3	0306	1	CAP	9	0306	1	NUT
4	0306	1	WASHER	10	0306	1	SCREW
5	0306	1	TANK	11	0306	1	MOUNT
6	0306	1	STRAP	12	0306	1	PLUG

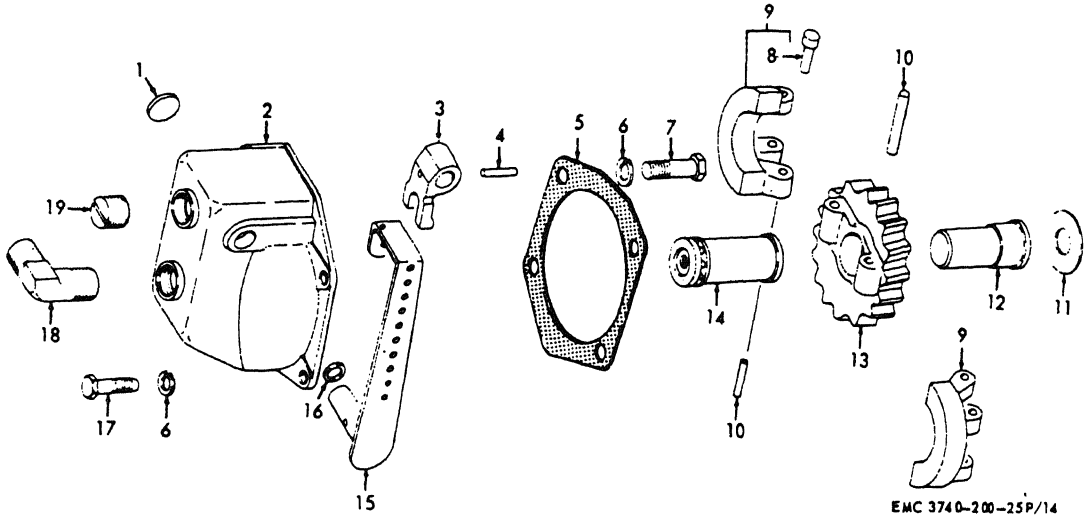

Figure 14. Governor Assembly.

INDEX TO PARTS, FIGURE 14

REF NO.	FUNCT GROUP	APPL PARTS	ITEM NAME	REF NO.	FUNCT GROUP	APPL PARTS	ITEM NAME
1	0308	1	PLUG	11	0308	1	WASHER
2	0308	1	HOUSING	12	0308	1	BUSHING
3	0308	1	CLEVIS	13	0308	1	GEAR
4	0308	1	PIN	14	0308	1	SLV-BRG
5	0308	1	GASKET	15	0308	1	SFT-LVR
6	0308	1	WASHER	16	0308	1	PACKING
7	0308	1	SCREW	17	0308	1	SCREW
8	0308	1	PIN	18	0106	1	ELBOW
9	0308	1	FLYWGHT	19	0308	1	PLUG
10	0308	1	PIN				

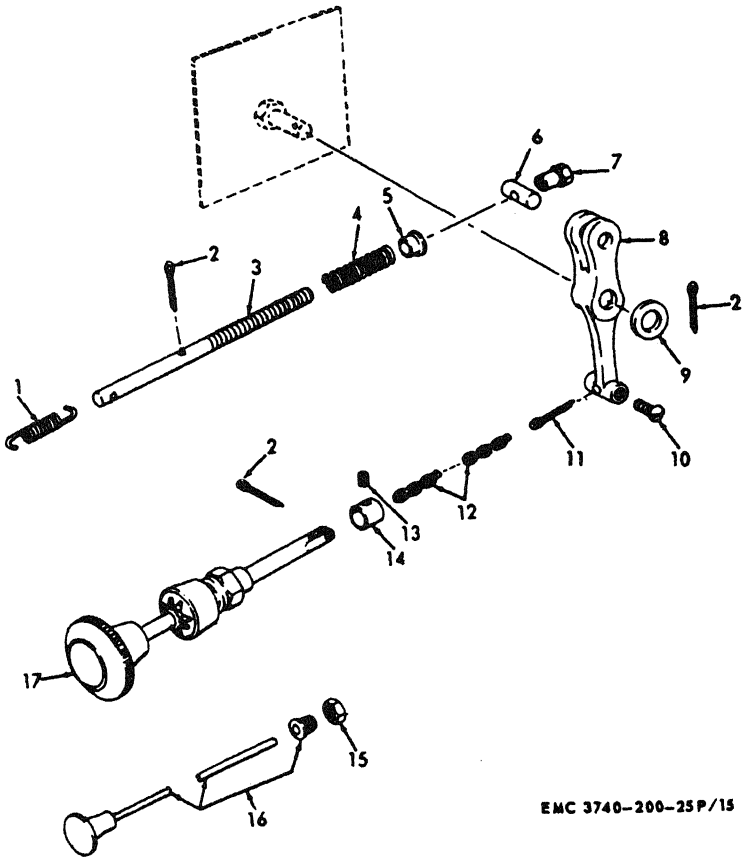

Figure 15. Governor Choke and Controls.

INDEX TO PARTS, FIGURE 15

REF NO.	FUNCT GROUP	APPL PARTS	ITEM NAME	REF NO.	FUNCT GROUP	APPL PARTS	ITEM NAME
1	0308	1	SPRING	10	0308	1	SCREW
2	0308	1	PIN	11	0308	1	PIN
3	0308	1	PIN	12	0308	1	CHAIN
4	0308	1	SPRING	13	0308	1	SETSCRW
5	0308	1	RETAINR	14	0308	1	COLLAR
6	0308	1	PIN	15	0312	1	NUT
7	0308	1	NUT	16	0312	1	CONTROL
8	0308	1	LEVER	17	0308	1	CONTROL
9	0308	1	WASHER				

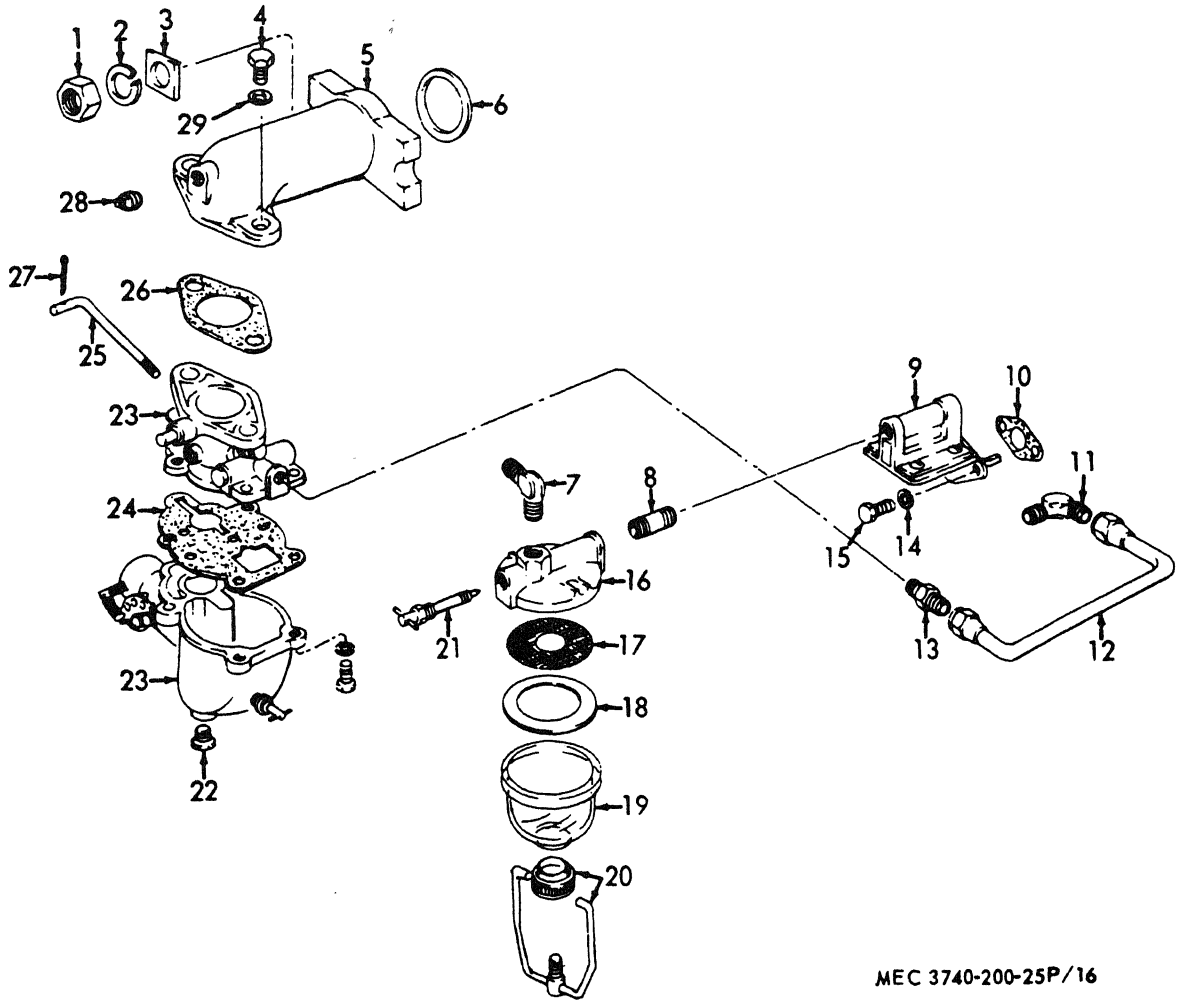

Figure 16. Intake, Manifold, Carburetor, Fuel Pump and Strainer.

INDEX TO PARTS, FIGURE 16

REF NO.	FUNCT GROUP	APPL PARTS	ITEM NAME	REF NO.	FUNCT GROUP	APPL PARTS	ITEM NAME	REF NO.	FUNCT GROUP	APPL PARTS	ITEM NAME
1	0108	1	NUT	14	0302	1	WASHER	20	0309	2,3,4,5	BAIL AY
2	0108	1	WASHER	15	0302	1	SCREW	20	0309	6,7	BAIL AY
3	0108	1	CLAMP	16	0309	2,3,4,5	COVER	21	0309	2,3,4,5	VALVE
4	0301	1	BOLT	16	0309	6,7	COVER	21	0309	6,7	VALVE
5	0108	1	MNIFOLD	17	0309	2	SCREEN	22	0301	1	PLUG
6	0108	1	GASKET	17	0309	3	STR LMT	23	0301	1	CRBURTR
7	0306	1	ELBOW	17	0309	4	SCREEN	24	0301	1	GASKET
8	0306	1	NIPPLE	17	0309	5,6,7	STR LMT	25	0312	1	ROD
9	0302	1	PUMP	18	0309	2,3,4,5	WASHER	26	0301	1	GASKET
10	0302	1	GASKET	18	0309	6,7	WASHER	27	0312	1	PIN
11	0306	1	ELBOW	19	0309	2,3,4,5	BOWL	28	0108	1	PLUG
12	0306	1	LINE	19	0309	6,7	BOWL	29	0301	1	WASHER
13	0306	1	ADAPTER								

INDEX TO PARTS, FIGURE 17

REF NO.	FUNCT GROUP	APPL PARTS	ITEM NAME
1	0401	1	CLAMP
2	0401	1	SCREW
3	0401	1	MUFFLER
4	0401	1	ELBOW
5	0401	1	PIPE
6	0108	1	MNIFOLD
7	0108	1	GASKET
8	0401	1	BOLT
9	0401	1	CAP
10	0401	1	SPRING
11	0401	1	SUPPORT
12	0401	1	WASHER
13	0401	1	SCREW
14	0401	1	NUT
15	0401	1	WASHER
16	0401	1	NUT
17	0401	1	CLAMP
18	0401	1	PLUG

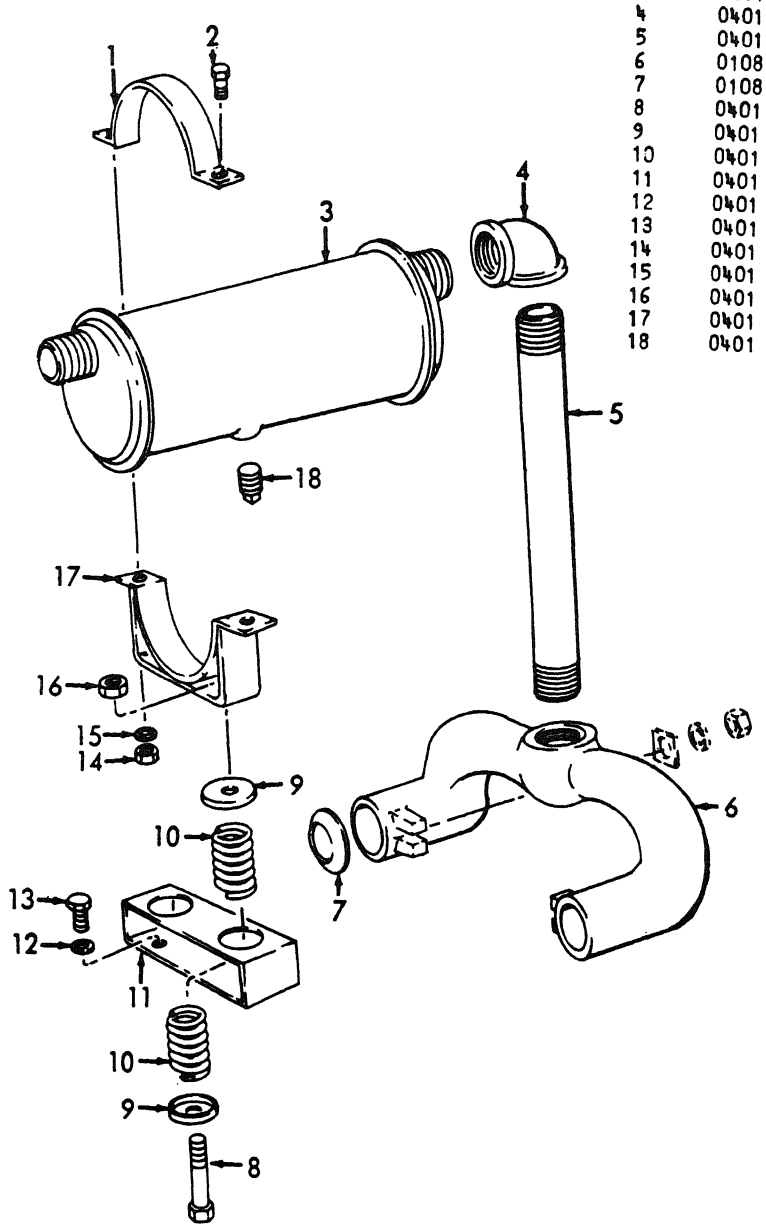

MEC 3740-200-25P/17

Figure 17. Muffler, Pipe, Exhaust Manifold and Related Parts.

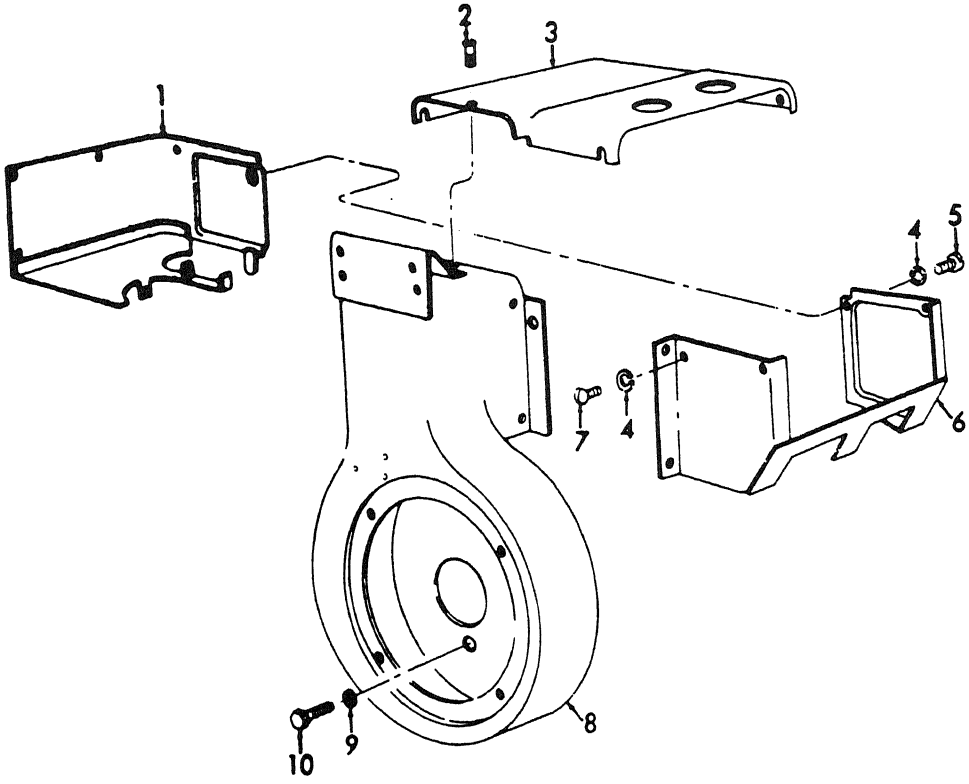

MEC 3740-200-25P/18

Figure 18. Shrouds, Cover and Related Parts.

INDEX TO PARTS, FIGURE 18

REF NO.	FUNCT GROUP	APPL PARTS	ITEM NAME	REF NO.	FUNCT GROUP	APPL PARTS	ITEM NAME	REF NO.	FUNCT GROUP	APPL PARTS	ITEM NAME
1	0502	1	SHROUD	6	0502	1	DEFLCTR	9	0502	2,3,4,5	WASHER
2	0502	1	SCREW	7	0502	1	SCREW	9	9592	6,7	WASHER
3	0502	1	COVER	8	0502	2,3,4,5	SHROUD	10	0502	2,3,4,5	BOLT
4	0502	1	WASHER	8	0502	6,7	SHROUD	10	0502	6,7	BOLT
5	0502	1	SCREW								

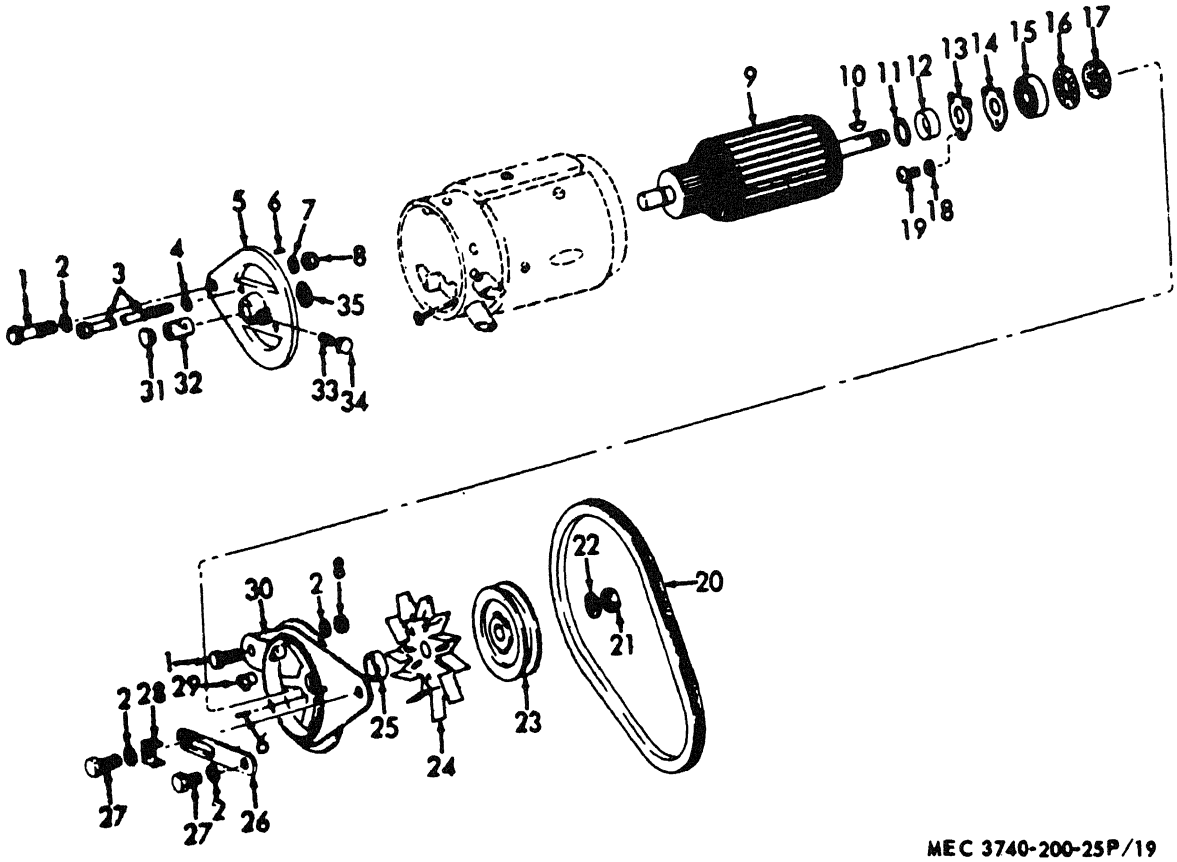

Figure 19. Generator.

INDEX TO PARTS, FIGURE 19

REF NO.	FUNCT GROUP	APPL PARTS	ITEM NAME	REF NO.	FUNCT GROUP	APPL PARTS	ITEM NAME	REF NO.	FUNCT GROUP	APPL PARTS	ITEM NAME
1	0601	1	BOLT	13	0601	1	RETAINR	25	0601	1	SPACER
2	0601	1	WASHER	14	0601	1	GASKET	26	0601	1	ARM
3	0601	1	BOLT	15	0601	1	BEARING	27	0601	1	BOLT
4	0601	1	WASHER	16	0601	1	RETAINR	28	0601	1	WASHER
5	0601	1	HEAD AY	17	0601	1	WASHER	29	0601	1	OILER
6	0601	1	PIN	18	0601	1	WASHER	30	0601	1	HEAD
7	0601	1	WASHER	19	0601	1	SCREW	31	0601	1	COVER
8	0601	1	NUT	20	0601	1	BELT	32	0601	1	BEARING
9	0601	1	ARMTURE	21	0601	1	NUT	33	0601	1	WICK
10	0601	1	KEY	22	0601	1	WASHER	34	0601	1	OILER
11	0601	1	RING	23	0601	1	PULLEY	35	0601	1	RETAINR
12	0601	1	RETAINR	24	0601	1	FAN				

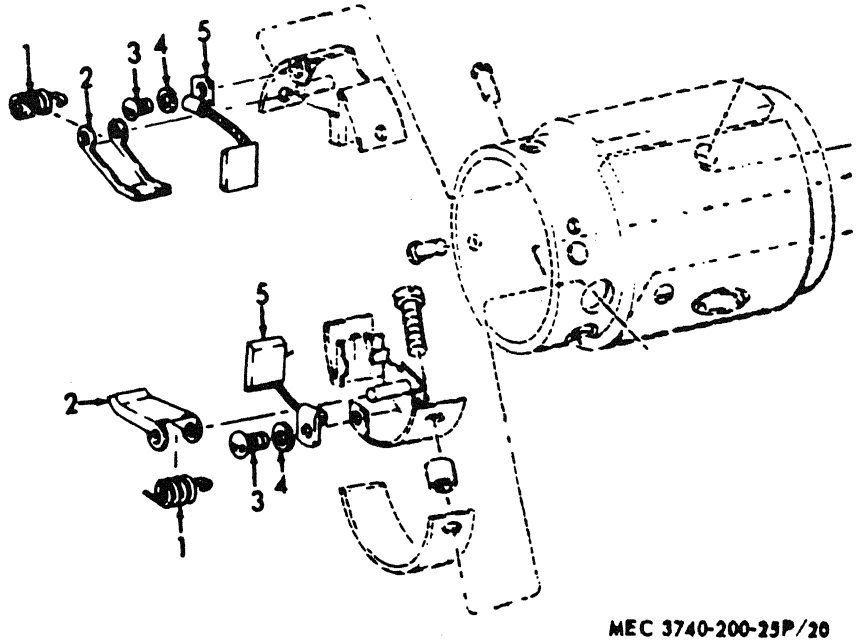

MEC 3740-200-25P/20

Figure 20. Generator Brushes.

INDEX TO PARTS, FIGURE 20

REF NO.	FUNCT GROUP	APPL PARTS	ITEM NAME
1	0601	1	SPRING
2	0601	1	ARM
3	0601	1	SCREW
4	0601	1	WASHER
5	0601	1	BRSH ST

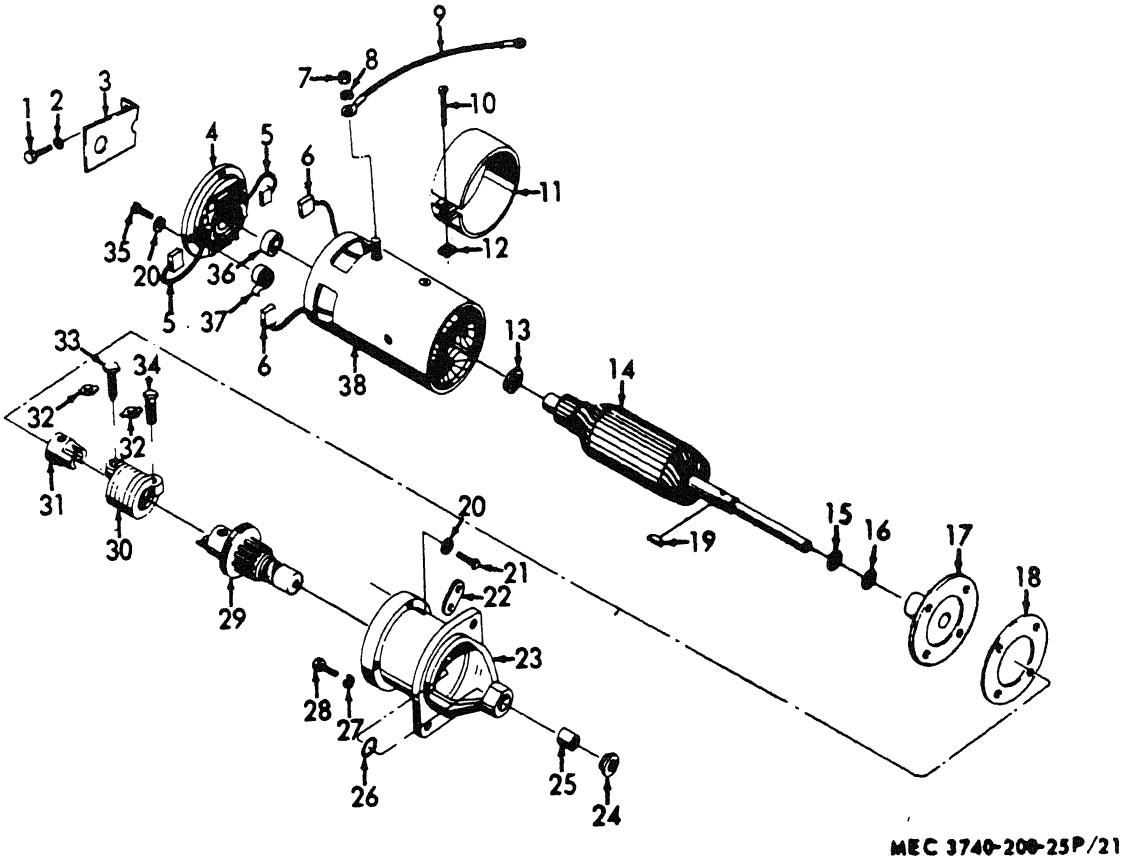

Figure 21. Starter.

INDEX TO PARTS, FIGURE 21

REF NO.	FUNCT GROUP	APPL PARTS	ITEM NAME	REF NO.	FUNCT GROUP	APPL PARTS	ITEM NAME	REF NO.	FUNCT GROUP	APPL PARTS	ITEM NAME
1	0603	1	SCREW	14	0603	1	ARMTURE	27	0603	1	WASHER
2	0603	1	GASKET	15	0603	1	WASHER	28	0603	1	SCREW
3	0603	1	BRACKET	16	0603	1	WASHER	29	0603	1	SF-PION
4	0603	1	END BEL	17	0603	1	BEARING	30	0603	1	SPRING
5	0603	1	BRUSH	18	0603	1	GASKET	31	0603	1	HEAD
6	0603	1	BRUSH	19	0603	1	KEY	32	0603	1	WASHER
7	0603	1	NUT	20	0603	1	WASHER	33	0603	1	SETSCRW
8	0603	1	WASHER	21	0603	1	BOLT	34	0603	1	BOLT
9	0603	1	CABLE	22	4702	1	BRACKET	35	0603	1	SCREW
10	0603	1	SCREW	23	0603	1	HOUSING	36	0603	1	DISK
11	0603	1	BAND	24	0603	1	CAP	37	0603	1	SPRING
12	0603	1	NUT	25	0603	1	BEARING	38	0603	1	FRM-FLD
13	0603	1	WASHER	26	0603	1	SEAL				

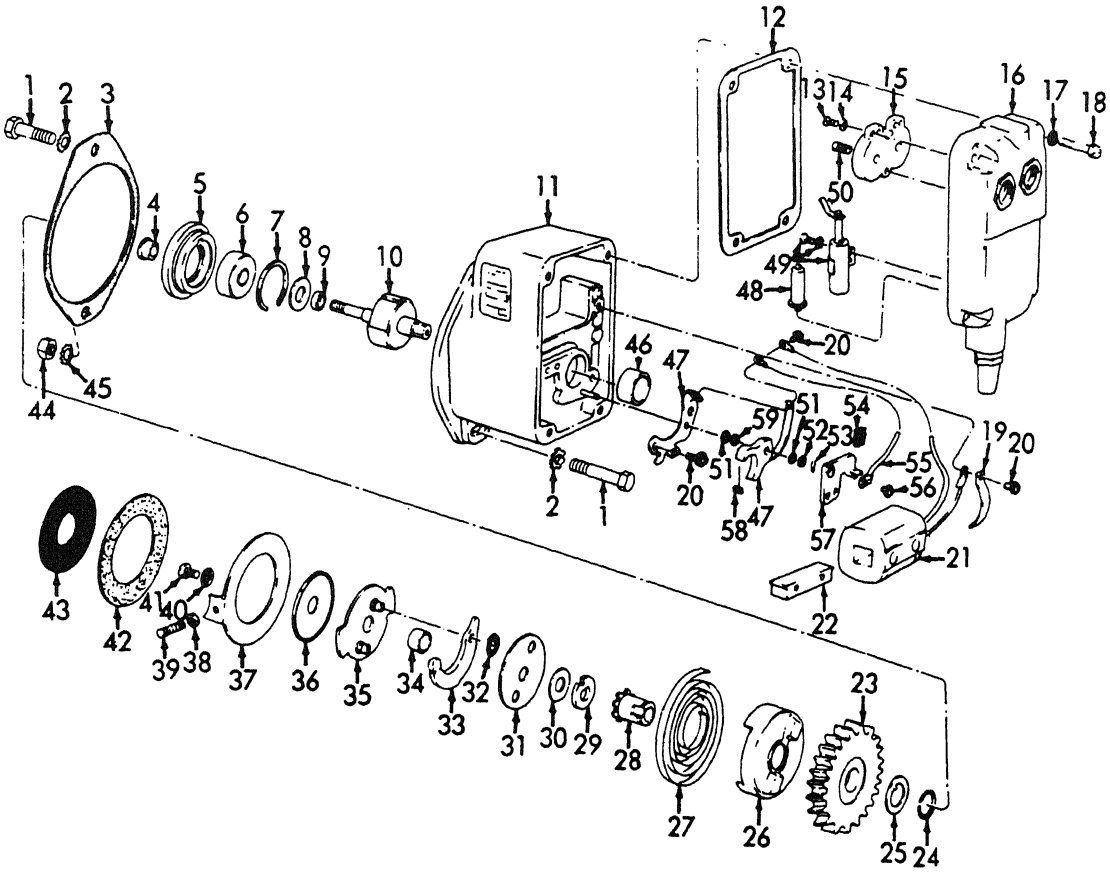

MEC 3740-200-25P/22

Figure 22. Magneto.

INDEX TO PARTS, FIGURE 22

REF NO.	FUNCT GROUP	APPL PARTS	ITEM NAME	REF NO.	FUNCT GROUP	APPL PARTS	ITEM NAME	REF NO.	FUNCT GROUP	APPL PARTS	ITEM NAME
1	0605	2,4	SCREW	21	0605	2,4	COIL	41	0605	2,4	SCREW
2	0605	2,4	WASHER	22	0605	2,4	CORE AY	42	0605	2,4	GASKET
3	0605	2,4	GASKET	23	0605	2,4	GEAR	43	0605	2,4	SEAL
4	0605	2,4	BEARING	24	0605	2,4	RING	44	0605	2,4	NUT
5	0605	2,4	RETAINR	25	0605	2,4	WASHER	45	0605	2,4	WASHER
6	0605	2,4	BEARING	26	0605	2,4	CUP	46	0605	2,4	BEARING
7	0605	2,4	RING	27	0605	2,4	SPRING	47	0605	2,4	CONT ST
8	0605	2,4	SHIELD	28	0605	2,4	NUT	48	0605	2,4	ROD GRP
9	0605	2,4	SPACER	29	0605	2,4	WASHER	49	0605	2,4	CONDNSR
10	0605	2,4	ROTOR	30	0605	2,4	WASHER	50	0605	2,4	SPRING
11	0605	2,4	HOUSING	31	0605	2,4	RETAINR	51	0605	2,4	WASHER
12	0605	2,4	GASKET	32	0605	2,4	SPRING	52	0605	2,4	WASHER
13	0605	2,4	SCREW	33	0605	2,4	ARM	53	0605	2,4	PIN
14	0605	2,4	WASHER	34	0605	2,4	SPACER	54	0605	2,4	WICK
15	0605	2,4	TML BLK	35	0605	2,4	FLANGE	55	0605	2,4	LEAD
16	0605	2,4	COVER	36	0605	2,4	DEFLCTR	56	0605	2,4	S AY WS
17	0605	2,4	WASHER	37	0605	2,4	PLATE	57	0605	2,4	BRACKET
18	0605	2,4	SCREW	38	0605	2,4	NUT	58	0605	2,4	FELT
19	0605	2,4	CLAMP	39	0605	2,4	SETSCRW	59	0605	2,4	WASHER
20	0605	2,4	S AY WS	40	0605	2,4	WASHER				

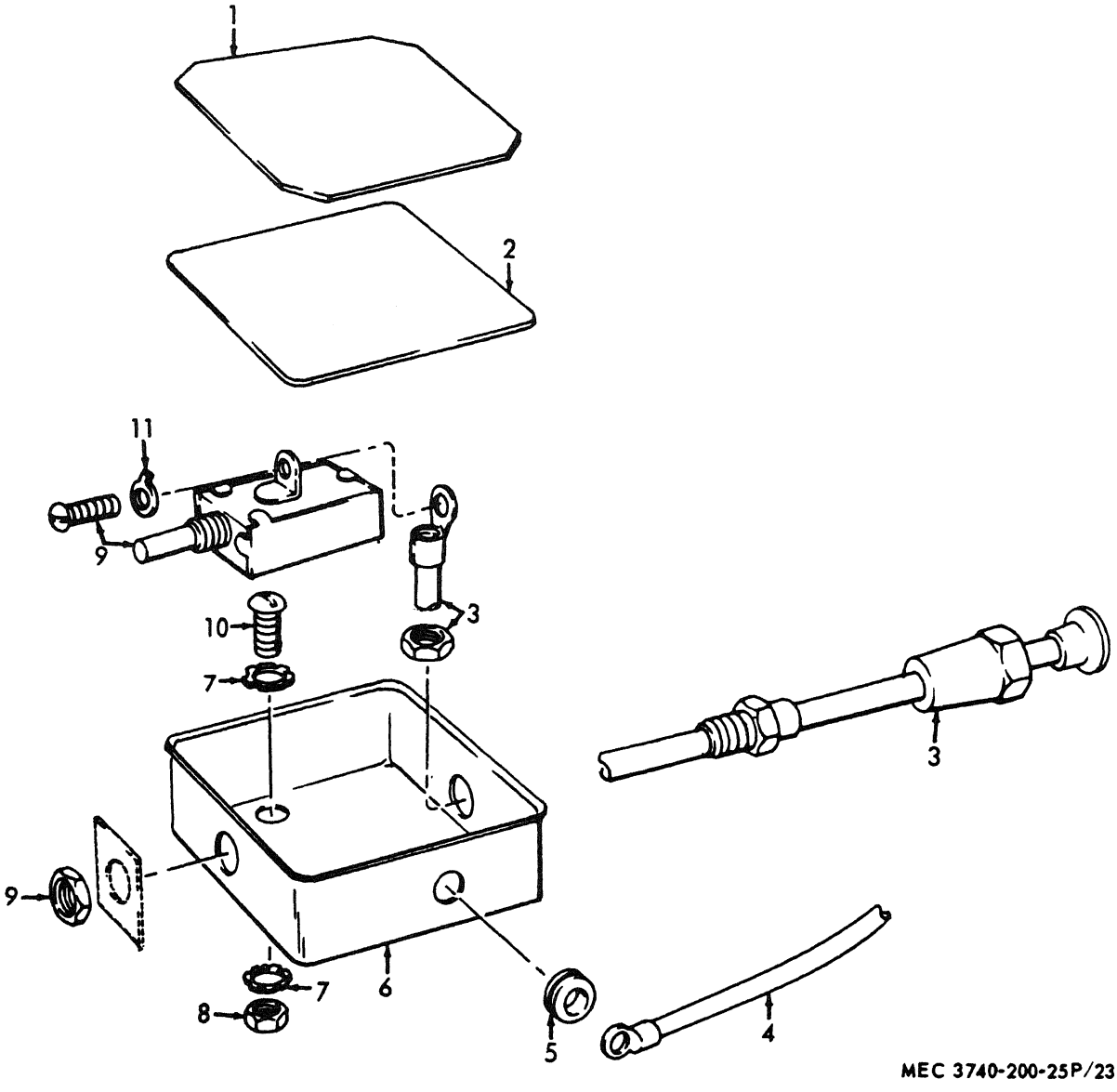

Figure 23. Stop Switch and Related Parts.

INDEX TO PARTS, FIGURE 23

REF NO.	FUNCT GROUP	APPL PARTS	ITEM NAME	REF NO.	FUNCT GROUP	APPL PARTS	ITEM NAME
1	0607	1	COVER	7	0607	1	WASHER
2	0607	1	INSULTN	8	0607	1	NUT
3	0607	1	LEAD AY	9	0607	1	SWITCH
4	0606	1	WIRE AY	10	0607	1	SCREW
5	0607	1	GROMMET	11	0607	1	WASHER
6	0607	1	BOX				

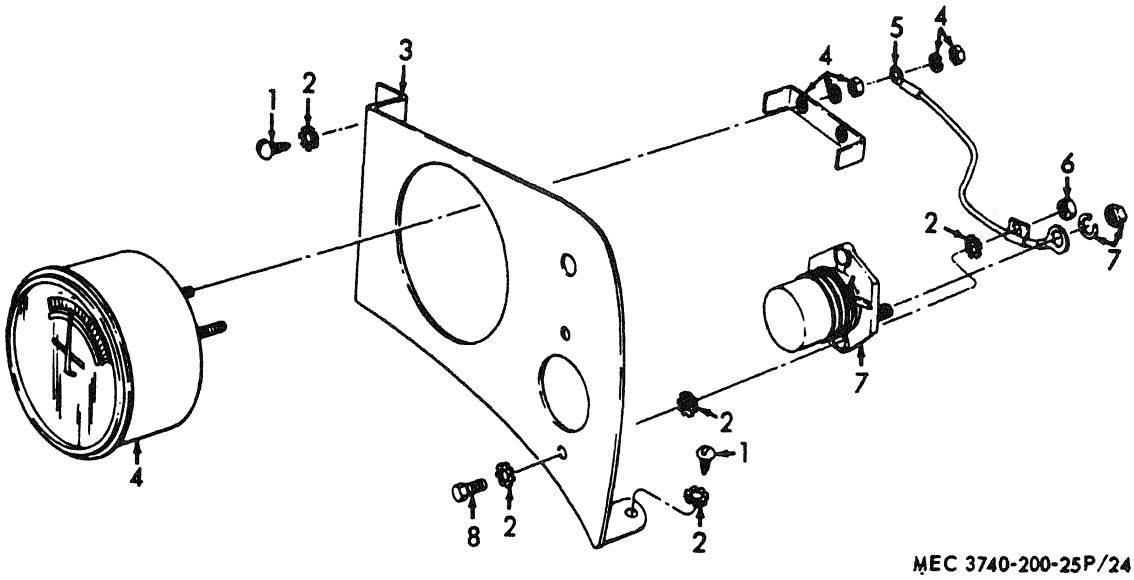

Figure 24. Control Panel, Ammeter and Starter Switch.

INDEX TO PARTS, FIGURE 24

REF NO.	FUNCT GROUP	APPL PARTS	ITEM NAME
1	0607	1	SCREW
2	0607	1	WASHER
3	0607	1	PANEL
4	0607	1	AMMETER
5	0607	1	CABLE
6	0607	1	NUT
7	0607	1	SWITCH
8	0607	1	SCREW

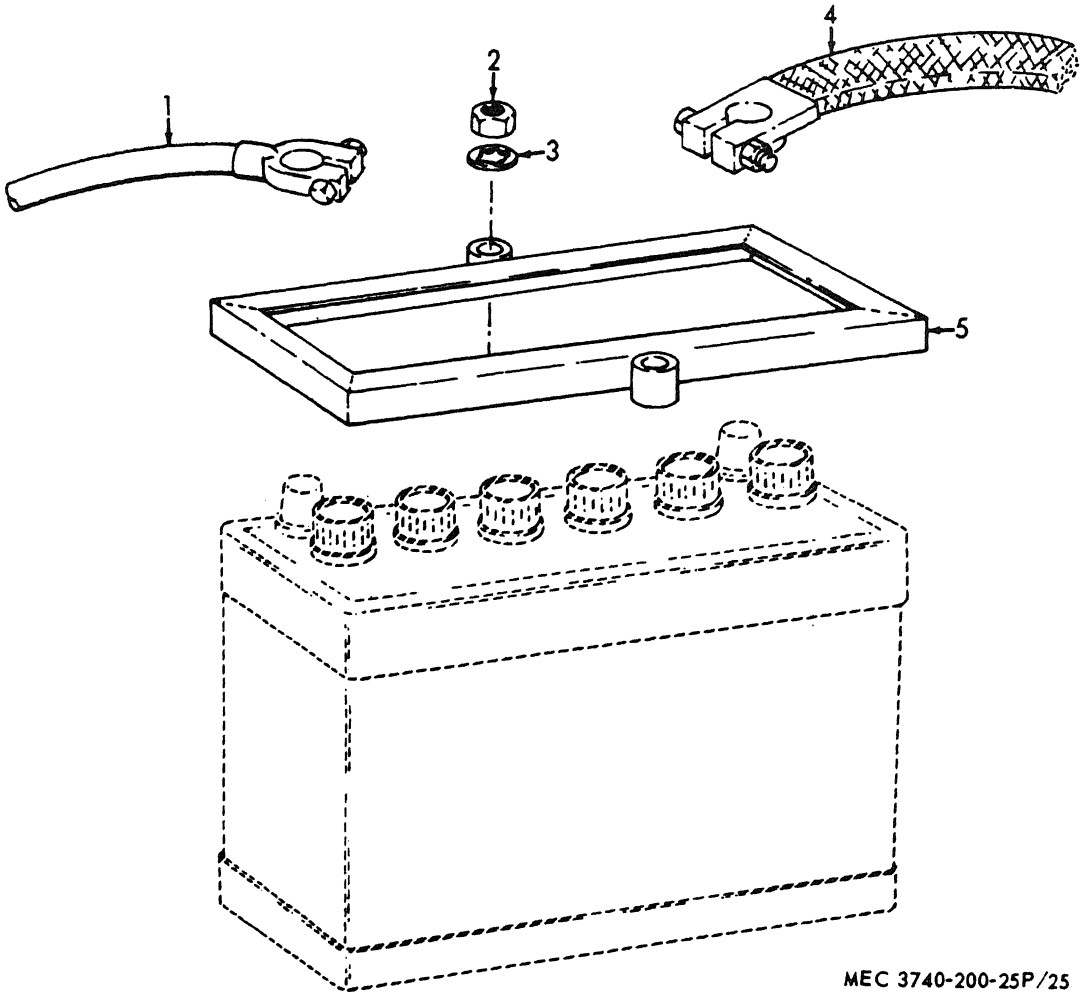

Figure 25. Battery Storage Holder and Leads.

INDEX TO PARTS, FIGURE 25

REF NO.	FUNCT GROUP	APPL PARTS	ITEM NAME
1	0612	1	CABLE
2	0612	1	NUT
3	0612	1	WASHER
4	0612	1	CABLE
5	0612	1	CLAMP

INDEX TO PARTS, FIGURE 26

REF NO.	FUNCT GROUP	APPL PARTS	ITEM NAME	REF NO.	FUNCT GROUP	APPL PARTS	ITEM NAME	REF NO.	FUNCT GROUP	APPL PARTS	ITEM NAME
1	0615	1	COVER	10	0615	1	LEAD	17	0602	1	NUT
2	0615	1	SCREW	11	0615	1	LEAD AY	17	0615	1	NUT
3	0615	1	WASHER	12	0615	1	LEAD AY	18	0602	1	WASHER
4	0602	1	REGULTR	13	0615	1	ADAPTER	18	0615	1	WASHER
5	0615	1	LEAD AY	14	0602	1	SCREW	19	0602	1	SCREW
6	0615	1	BASE AY	14	0615	1	SCREW	19	0615	1	SCREW
7	0615	1	CAPCTOR	15	0615	1	CAPCTOR	20	0615	1	NUT
8	0615	1	WASHER	16	0602	1	WASHER	21	0615	1	NUT
9	0615	1	SCREW	16	0615	1	WASHER	22	0615	1	LEAD

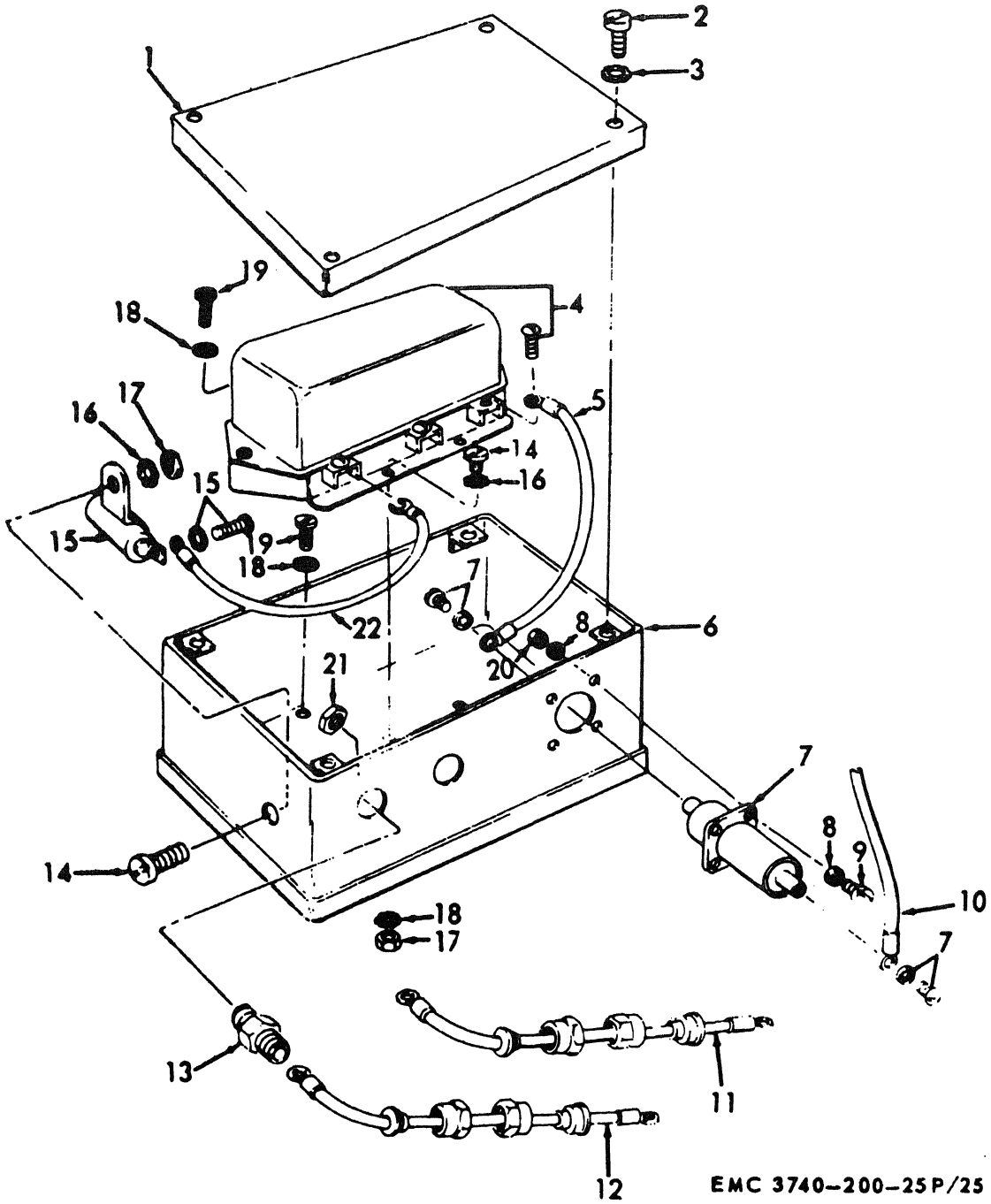

Figure 26. Voltage Regulator and Related Parts.

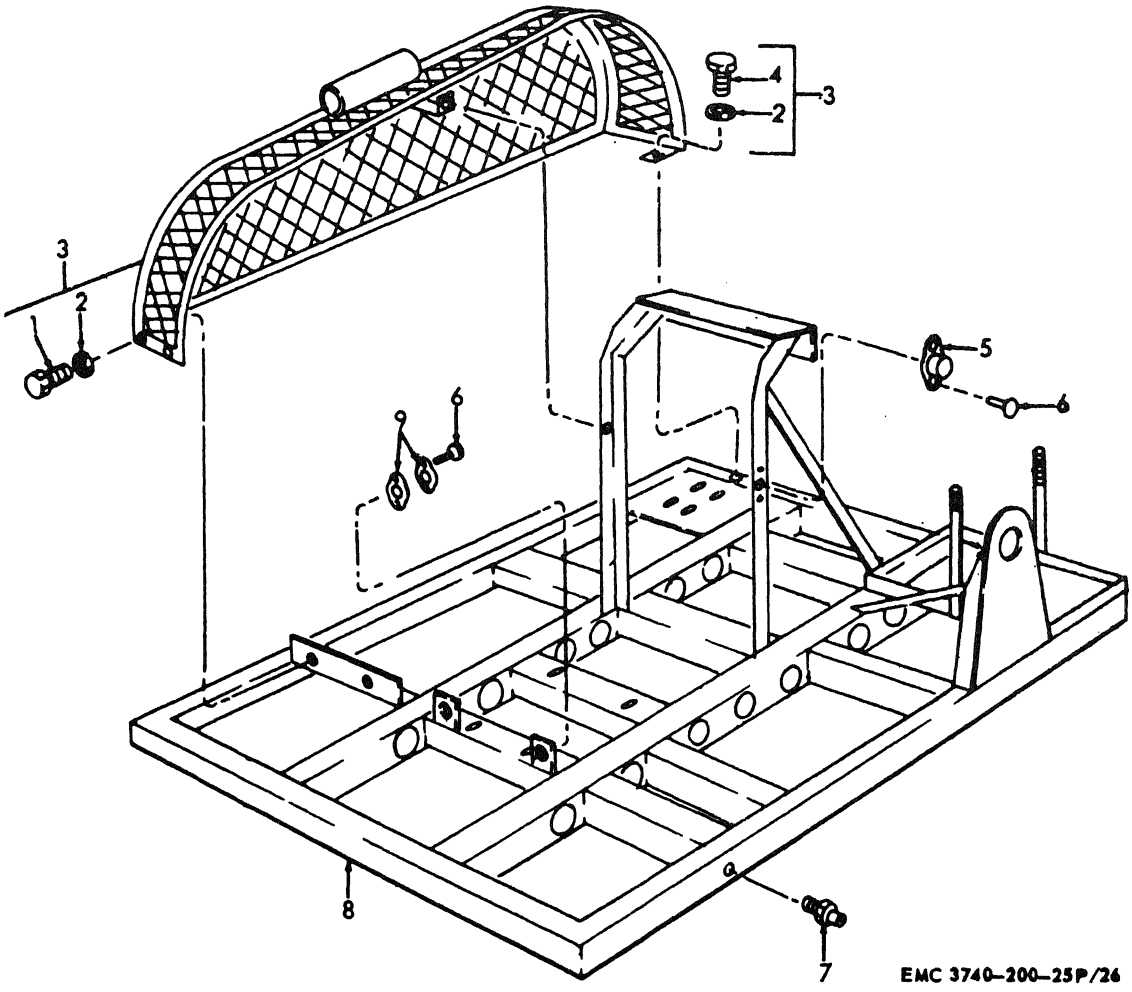

Figure 27. Chassis Frame, Belt Guard and Components.

INDEX TO PARTS, FIGURE 27

REF NO.	FUNCT GROUP	APPL PARTS	ITEM NAME	REF NO.	FUNCT GROUP	APPL PARTS	ITEM NAME
1	5703	1	SCREW	6	1501	1	RIVET
2	5703	1	WASHER	7	1501	1	STUD
3	5703	1	GUARD	8	1501	1	CHASSIS
4	5703	1	SCREW	9	1501	1	RECPTCL
5	1501	1	FASTENR				

INDEX TO PARTS, FIGURE 28

REF NO.	FUNCT GROUP	APPL PARTS	ITEM NAME	REF NO.	FUNCT GROUP	APPL PARTS	ITEM NAME	REF NO.	FUNCT GROUP	APPL PARTS	ITEM NAME
1	1808	1	STRAP	10	1801	1	STUD	19	1808	1	STRAP
2	1808	1	STRAP	11	1801	1	RETAINR	20	1501	1	BOLT
3	1801	1	RETAINR	12	1801	1	GROMMET	21	1801	1	SCREW
4	1801	1	GROMMET	13	1801	1	STUD	22	1801	1	FLANGE
5	1801	1	STUD	14	1801	1	PANEL	23	2201	1	SHIM
6	1801	1	PANEL	15	1801	1	RECPTCL	24	2201	1	SHIM
7	2201	1	STRIP	16	1801	1	RIVET	25	1801	1	WASHER
8	2201	1	CURTAIN	16	2201	1	RIVET	25	2201	1	WASHER
9	1801	1	SCREW	17	1801	1	DCK PLT	26	1801	1	NUT
9	2201	1	SCREW	18	2201	1	RECPTCL	26	2201	1	NUT

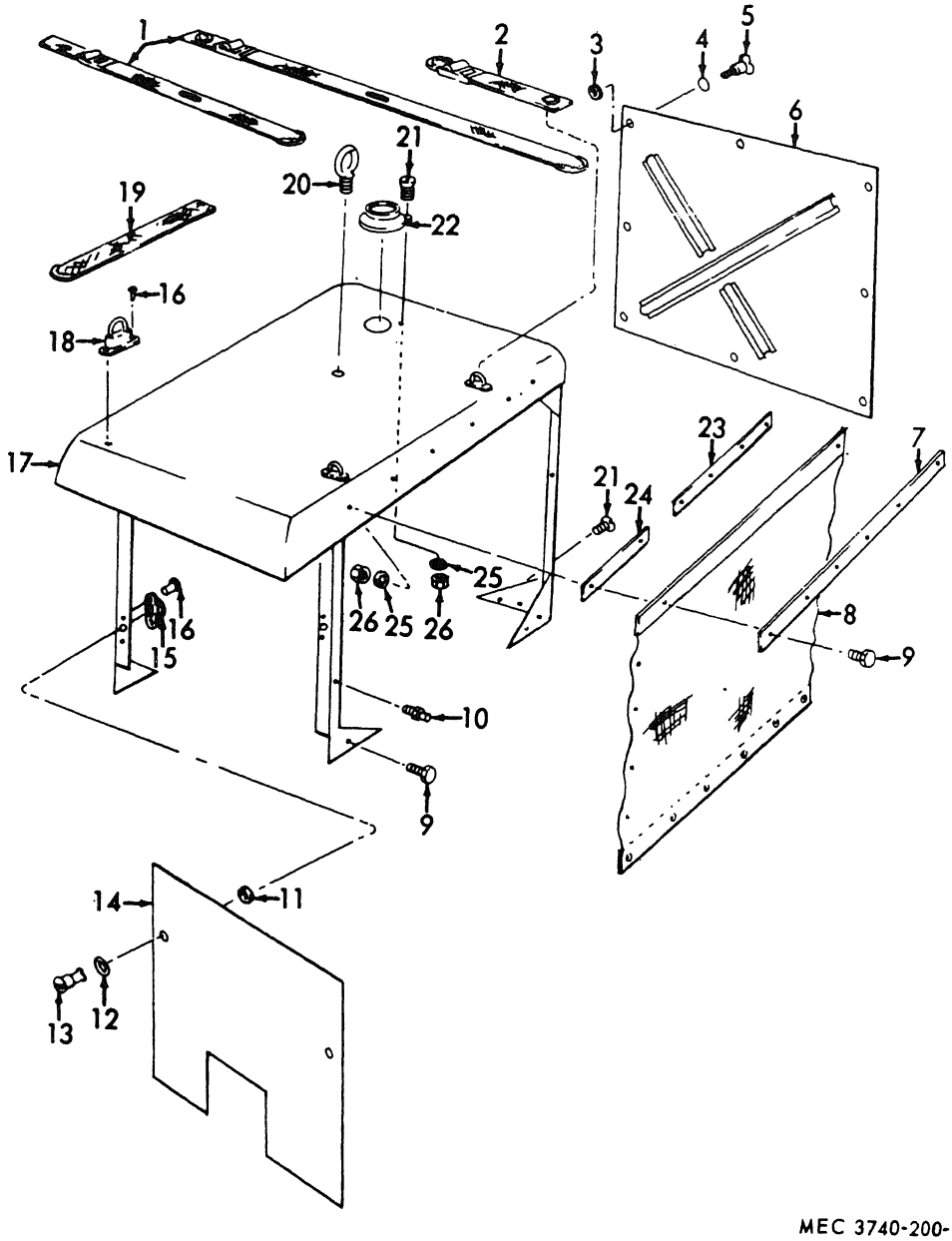

MEC 3740-200-25P/28

Figure 28. Canopy Assembly and Deck Plate.

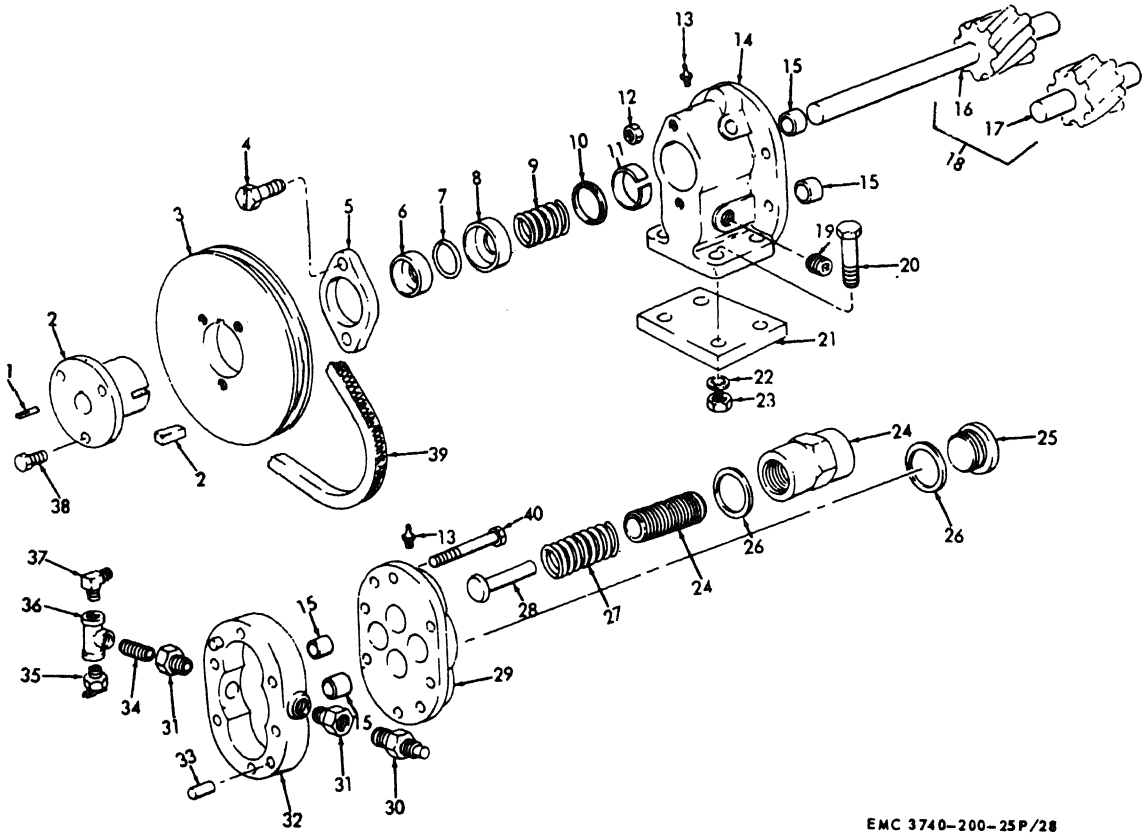

Figure 29. Water Pump, Sheave and Belt.

INDEX TO PARTS, FIGURE 29

REF NO.	FUNCT GROUP	APPL PARTS	ITEM NAME	REF NO.	FUNCT GROUP	APPL PARTS	ITEM NAME	REF NO.	FUNCT GROUP	APPL PARTS	ITEM NAME
1	5507	1	KEY	15	5501	1	BUSHING	28	5505	1	PLUNGER
2	5507	1	BUSHING	16	5501	1	GEAR	29	5500	1	CAP
3	5507	1	SHEAVE	17	5501	1	GEAR	30	5708	1	UNION
4	5501	1	SCREW	18	5501	1	GER SET	31	5708	1	BUSHING
5	5501	1	GLAND	19	5500	1	PLUG	32	5500	1	HOUSING
6	5501	1	RING	20	5500	1	SCREW	33	5500	1	DOWEL
7	5501	1	PACKING	21	5500	1	SHIM	34	5708	1	NIPPLE
8	5501	1	SEAL	22	5500	1	WASHER	35	5708	1	COCK
9	5501	1	SPRING	23	5500	1	NUT	36	5708	1	TEE
10	5501	1	STOP	24	5505	1	SCREW	37	5708	1	ELBOW
11	5501	1	RING	25	5500	1	CAP	38	5507	1	BOLT
12	5500	1	NUT	26	5500	1	GASKET	39	5507	1	BELT
13	5500	1	FITTING	26	5505	1	GASKET	40	5500	1	SCREW
14	5500	1	STAND	27	5505	1	SPRING				

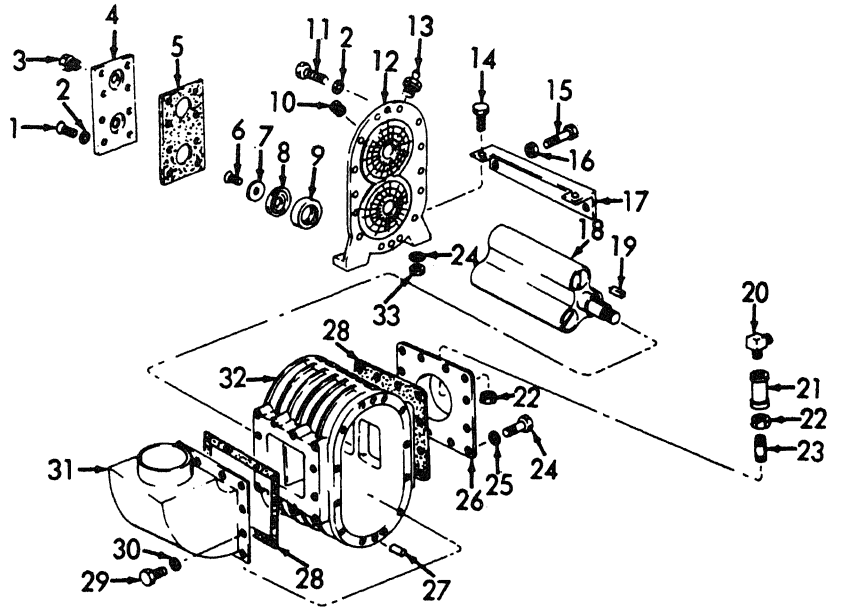

Figure 30. Air Blower Assembly.

INDEX TO PARTS, FIGURE 30

REF NO.	FUNCT GROUP	APPL PARTS	ITEM NAME	REF NO.	FUNCT GROUP	APPL PARTS	ITEM NAME	REF NO.	FUNCT GROUP	APPL PARTS	ITEM NAME
1	5703	1	SCREW	12	5703	1	PLATE	23	5708	1	NIPPLE
2	5703	1	WASHER	13	5703	1	FITTING	24	5703	1	SCREW
3	5703	1	FITTING	14	5703	1	SCREW	25	5703	1	WASHER
4	5703	1	CAP	15	5703	1	SCREW	26	5703	1	FLANGE
5	5703	1	GASKET	16	5703	1	NUT	27	5703	1	PIN
6	5703	1	SCREW	17	5703	1	BRACKET	28	5703	1	GASKET
7	5703	1	WASHER	18	5703	1	ROTOR	29	5703	1	SCREW
8	5703	1	BEARING	19	5703	1	KEY	30	5703	1	WASHER
9	5703	1	SEAL	20	5708	1	ELBOW	31	5703	1	MNIFOLD
10	5703	1	PLUG	21	5708	1	CUPLING	32	5703	1	HOUSING
11	5703	1	BOLT	22	5708	1	LOCKNUT	33	5703	1	NUT

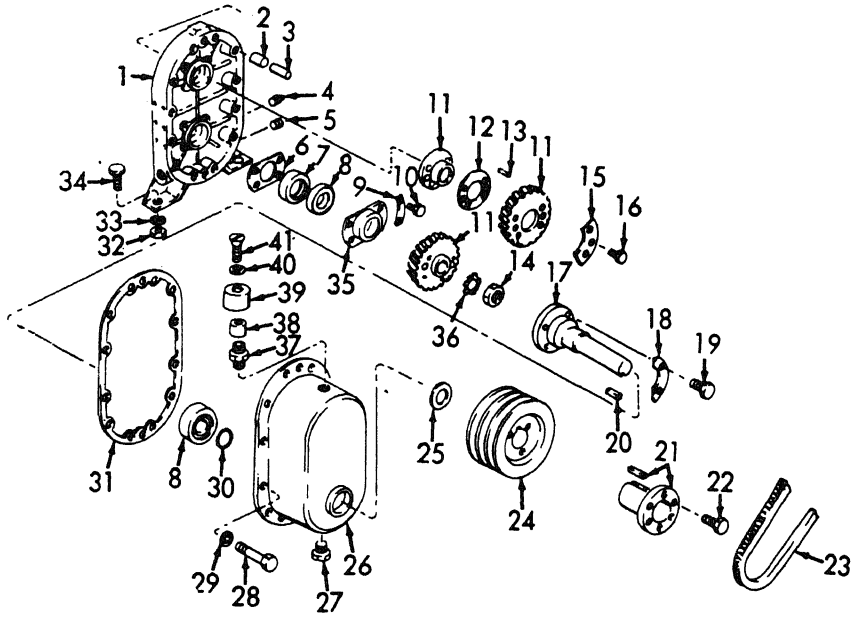

MEC 3740-200-25P/31

Figure 31. Cover, Plate, Pulley and Related Parts.

INDEX TO PARTS, FIGURE 31

REF NO.	FUNCT GROUP	APPL PARTS	ITEM NAME	REF NO.	FUNCT GROUP	APPL PARTS	ITEM NAME	REF NO.	FUNCT GROUP	APPL PARTS	ITEM NAME
1	5703	1	PLATE	15	5703	1	PLATE	29	5703	1	WASHER
2	5703	1	SPACER	16	5703	1	SCREW	30	5703	1	RING
3	5703	1	PIN	17	5703	1	SHAFT	31	5703	1	GASKET
4	5703	1	PLUG	18	5703	1	PLATE	32	5703	1	NUT
5	5703	1	PLUG	19	5703	1	SCREW	33	5703	1	WASHER
6	5703	1	SPACER	20	5703	1	KEY	34	5703	1	SCREW
7	5703	1	SEAL	21	5703	1	BUSHING	35	5703	1	RETAINR
8	5703	1	BEARING	22	5703	1	BOLT	36	5703	1	WASHER
9	5703	1	PLATE	23	5703	1	BELT	37	5703	1	BASE
10	5703	1	BOLT	24	5703	1	PULLEY	38	5703	1	ELEMENT
11	5703	1	GEAR AY	25	5703	1	SEAL	39	5703	1	SHIELD
12	5703	1	SHIM	26	5703	1	COVER	40	5703	1	WASHER
13	5703	1	DOWEL	27	5703	1	PLUG	41	5703	1	SCREW
14	5703	1	NUT	28	5703	1	BOLT				

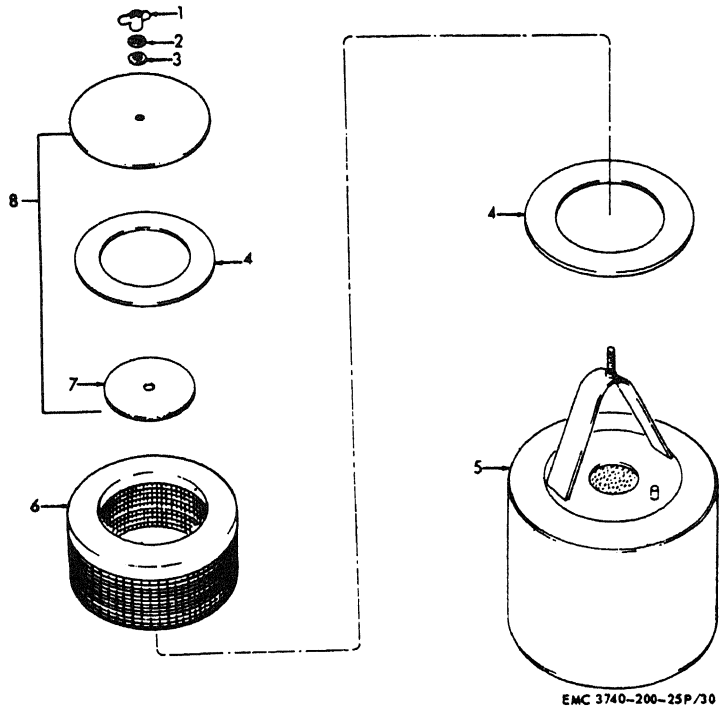

Figure 32. Air Filter Silencer.

INDEX TO PARTS, FIGURE 32

REF NO.	FUNCT GROUP	APPL PARTS	ITEM NAME	REF NO.	FUNCT GROUP	APPL PARTS	ITEM NAME
1	5703	2,3,4	NUT	5	5703	2,3,4	BODY
2	5703	2,3,4	WASHER	6	5703	2,3,4	ELEMENT
3	5703	2,3,4	WASHER	7	5703	2,3,4	FELT
4	5703	2,3,4	GASKET	8	5703	2,3,4	TOP AY

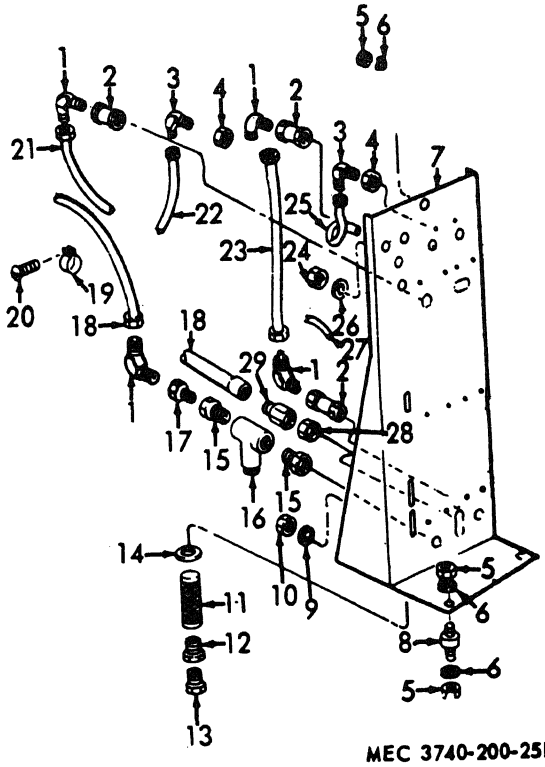

Figure 33 ①. Control Panel, Rear.

INDEX TO PARTS, FIGURE 33 ①

REF NO.	FUNCT GROUP	APPL PARTS	ITEM NAME	REF NO.	FUNCT GROUP	APPL PARTS	ITEM NAME	REF NO.	FUNCT GROUP	APPL PARTS	ITEM NAME
1	5708	1	ELBOW	11	5708	1	SCREEN	21	5708	1	TUBE
2	5708	1	CUPLING	12	5708	1	CAP	22	5708	1	TUBE
3	5708	1	ELBOW	13	5708	1	PLUG	23	5708	1	TUBE
4	5708	1	LOCKNUT	14	5708	1	GASKET	24	4702	1	NUT
5	5707	1	NUT	15	5708	1	BUSHING	24	5708	1	NUT
6	5707	1	WASHER	16	5708	1	BODY	25	4702	1	TUBE
7	5707	1	PANEL	17	5708	1	BUSHING	26	4702	1	WASHER
8	5707	1	MOUNT	18	5708	1	TUBE	27	4702	1	TUBE
9	4702	1	WASHER	19	5708	1	CLIP	28	5708	1	LOCKNUT
10	4702	1	NUT	20	5708	1	SCREW	29	5708	1	CNNCTOR

INDEX TO PARTS, FIGURE 33 ②

REF NO.	FUNCT GROUP	APPL PARTS	ITEM NAME
30	5707	1	BRACKET
31	5707	1	SCREW
32	5708	1	BUSHING
33	5708	1	NIPPLE
34	4702	1	FLOAT
35	4702	1	STOP
36	4702	1	RING
37	4702	1	RING
38	4702	1	TUBE
39	4702	1	BODY
40	4702	1	SCREW
41	4702	1	MANOMTR
42	4702	1	SCREW
43	5708	1	WHEEL
44	5708	1	VALVE
45	5708	1	CLAMP
46	5708	1	SCREW
47	5708	1	CAP
48	5708	1	SPRING
49	5708	1	SCREEN
50	5708	1	SPRING
51	5708	1	BODY
52	5708	1	BUSHING
53	5708	1	CNNCTOR
54	5708	1	HOSE
55	5708	1	LOCKNUT
56	5708	1	NIPPLE
57	5708	1	UNION
58	5708	1	TEE
59	5708	1	ELBOW
60	5708	1	NIPPLE
61	5708	1	ELBOW
62	4702	1	VALVE
63	5708	1	VALVE
64	5708	1	SCREW
65	4702	1	GAGE
66	5708	1	NIPPLE
67	4702	1	PLUG
68	4702	1	RING
69	4702	1	RING
70	4702	1	RING
71	4702	1	FITTING
72	5708	1	HOSE

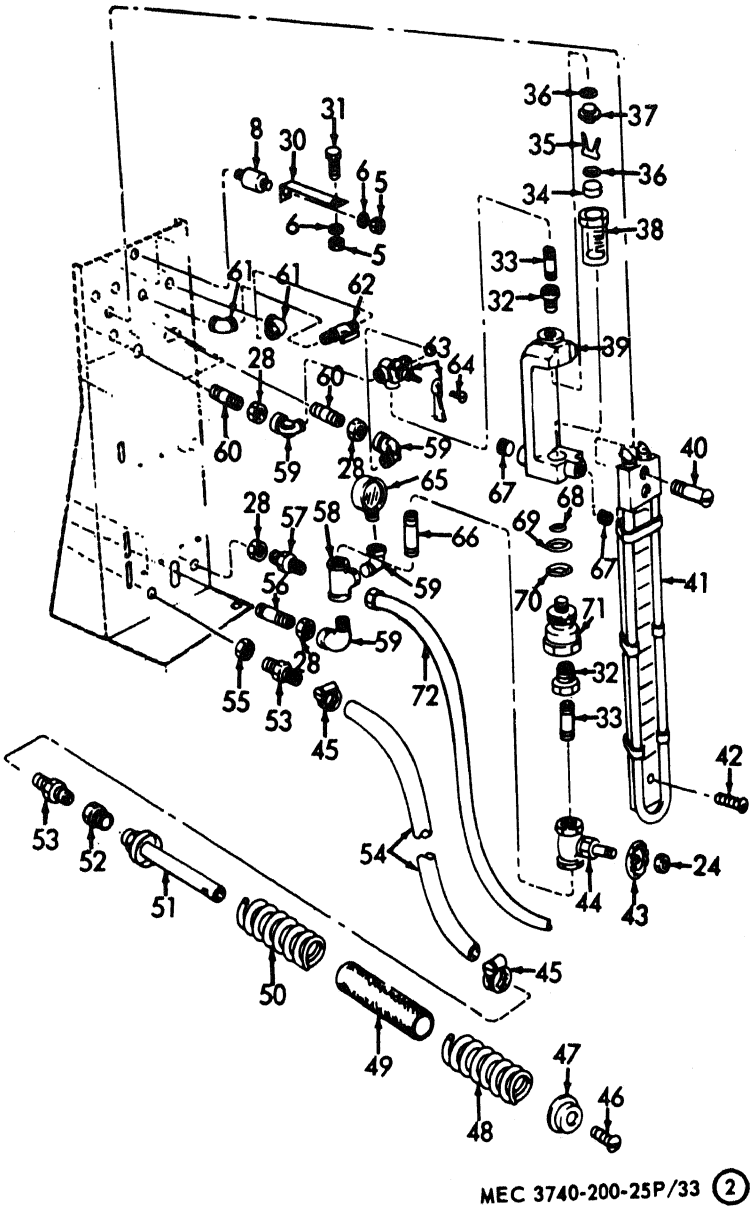

Figure 33 ②. Control Panel, Front.

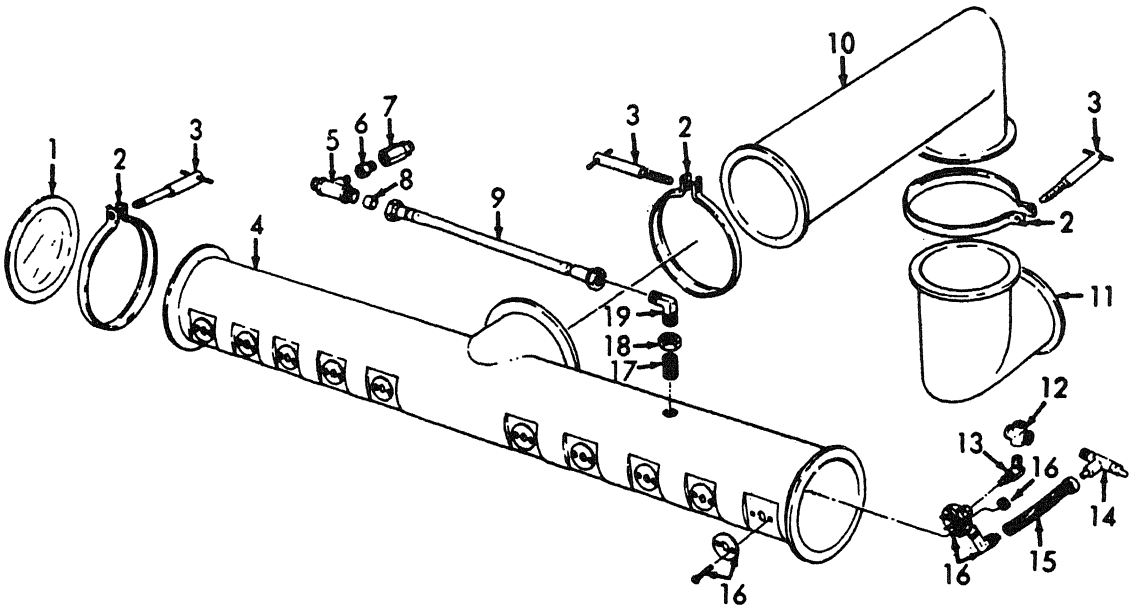

MEC 3740-200-25P/34

Figure 34. Spray Manifold, Nozzle Assemblies and Fittings.

INDEX TO PARTS, FIGURE 34

REF NO.	FUNCT GROUP	APPL PARTS	ITEM NAME	REF NO.	FUNCT GROUP	APPL PARTS	ITEM NAME	REF NO.	FUNCT GROUP	APPL PARTS	ITEM NAME
1	5704	2,3,4,5	END CAP	8	5708	1	SLEEVE	15	5708	1	TUBE AY
2	5704	2,3,4,5	CLAMP	9	5708	1	TUBE AY	16	5704	2,3,4,5	NOZL AY
3	5704	2,3,4,5	SCREW	10	5704	2,3,4,5	ELBOW	16	5704	6,7	NOZL AY
4	5704	2,3,4,5	NZL HED	11	5704	2,3,4,5	ELBOW	17	5708	1	NIPPLE
5	5708	1	TEE	12	5708	1	CROSS	18	5708	1	LOCKNUT
6	5708	1	BUSHING	13	5708	1	ELBOW	19	5708	1	ELBOW
7	5708	1	CNNCTOR	14	5708	1	TEE				

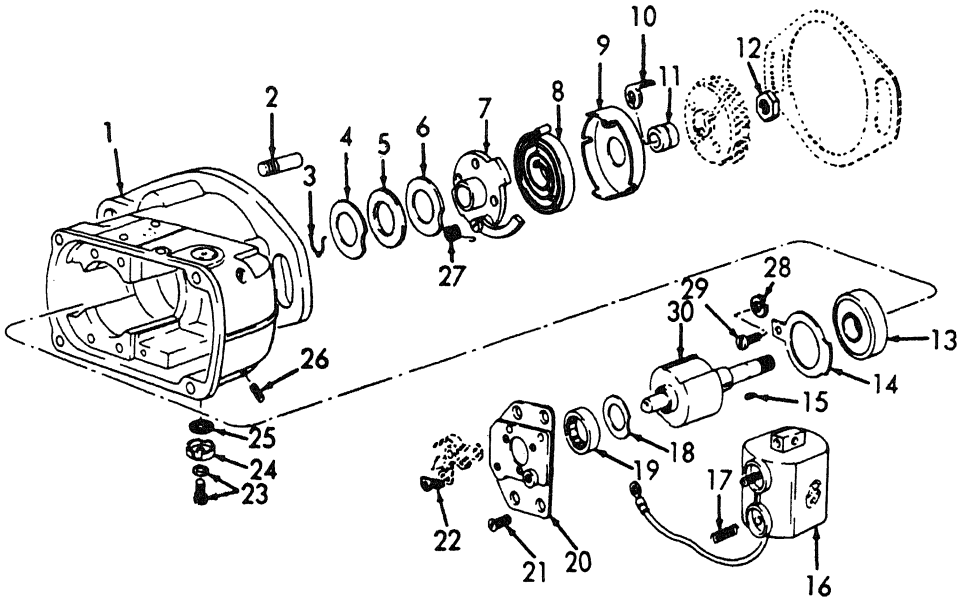

MEC 6115-300-25P/21

Figure 35. Magneto.

INDEX TO PARTS, FIGURE 35

REF NO.	FUNCT GROUP	APPL PARTS	ITEM NAME	REF NO.	FUNCT GROUP	APPL PARTS	ITEM NAME	REF NO.	FUNCT GROUP	APPL PARTS	ITEM NAME
1	0605	3,5,6,7	HOUSING	11	0605	3,5,6,7	BUSHING	21	0605	3,5,6,7	SCREW
2	0605	3,5,6,7	SETSCRW	12	0605	3,5,6,7	NUT	22	0605	3,5,6,7	WCK-HDR
3	0605	3,5,6,7	CLIP	13	0605	3,5,6,7	BEARING	23	0605	3,5,6,7	SCREW
4	0605	3,5,6,7	WASHER	14	0605	3,5,6,7	WASHER	24	0605	3,5,6,7	COVER
5	0605	3,5,6,7	SEAL	15	0605	3,5,6,7	KEY	25	0605	3,5,6,7	WR FBRC
6	0605	3,5,6,7	WASHER	16	0605	3,5,6,7	COIL	26	0605	3,5,6,7	SETSCRW
7	0605	3,5,6,7	CUPLING	17	0605	3,5,6,7	SPRING	27	0605	3,5,6,7	SPRING
8	0605	3,5,6,7	SPRING	18	0605	3,5,6,7	WASHER	28	0605	3,5,6,7	WASHER
9	0605	3,5,6,7	SHELL	19	0605	3,5,6,7	BEARING	29	0605	3,5,6,7	SCREW
10	0605	3,5,6,7	WASHER	20	0605	3,5,6,7	SUPPORT	30	0605	3,5,6,7	ROTOR

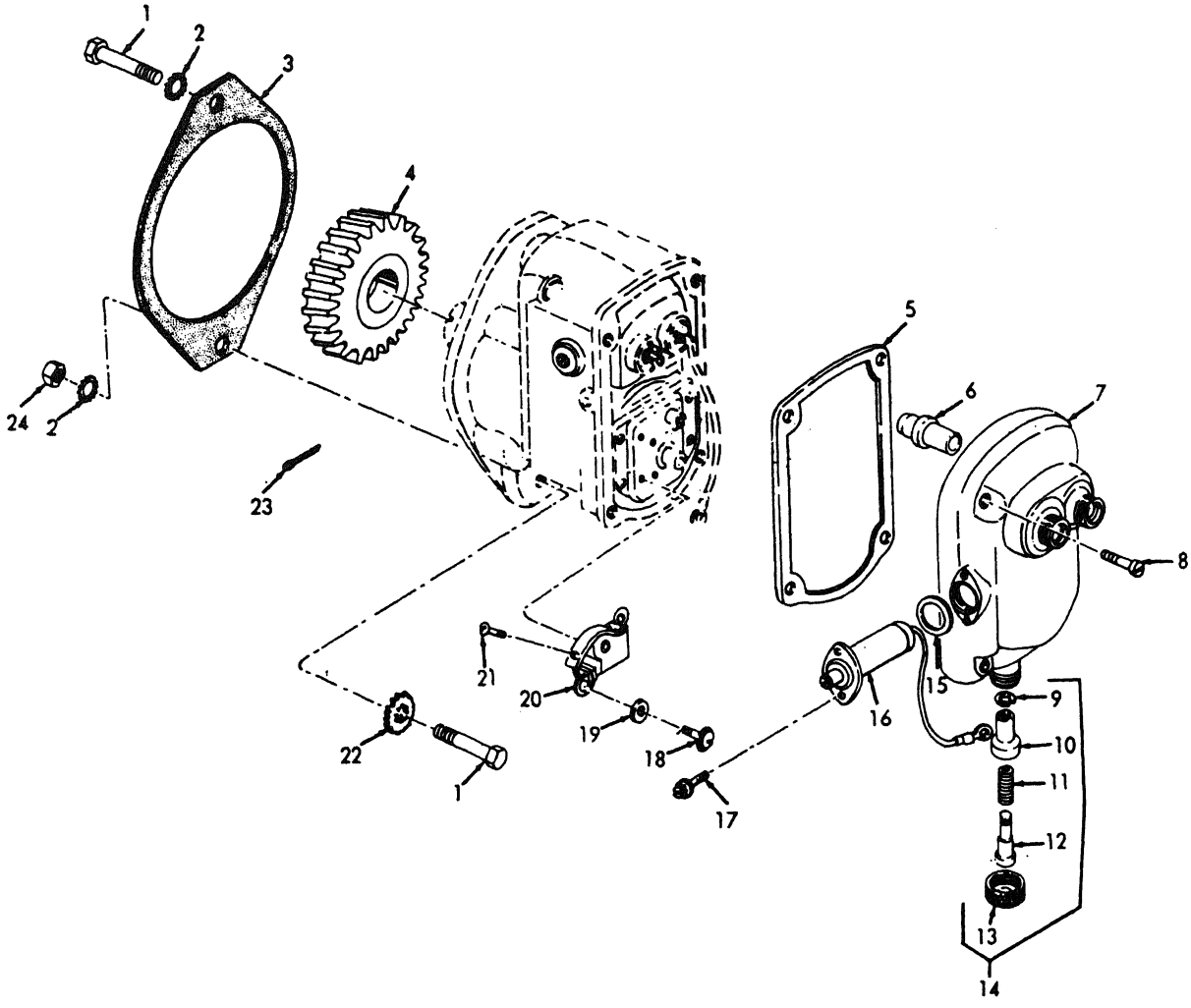

Figure 36. Magneto Cap, Condenser and Point Set.

INDEX TO PARTS, FIGURE 36

REF NO.	FUNCT GROUP	APPL PARTS	ITEM NAME	REF NO.	FUNCT GROUP	APPL PARTS	ITEM NAME	REF NO.	FUNCT GROUP	APPL PARTS	ITEM NAME
1	0605	3,5,6,7	SCREW	9	0605	3,5,6,7	CLIP	17	0605	3,5,6,7	SCREW
2	0605	3,5,6,7	WASHER	10	0605	3,5,6,7	SPACER	18	0605	3,5,6,7	SCREW
3	0605	3,5,6,7	GASKET	11	0605	3,5,6,7	SPRING	19	0605	3,5,6,7	WASHER
4	0605	3,5,6,7	GEAR	12	0605	3,5,6,7	PLUNGER	20	0605	3,5,6,7	ARM
5	0605	3,5,6,7	GASKET	13	0605	3,5,6,7	NUT	21	0605	3,5,6,7	SCREW
6	0605	3,5,6,7	OUTLET	14	0605	3,5,6,7	SWITCH	22	0605	3,5,6,7	WASHER
7	0605	3,5,6,7	CAP	15	0605	3,5,6,7	SEAL	23	0605	3,5,6,7	PIN
8	0605	3,5,6,7	SCREW	16	0605	3,5,6,7	CONDNSR	24	0605	3,5,6,7	NUT

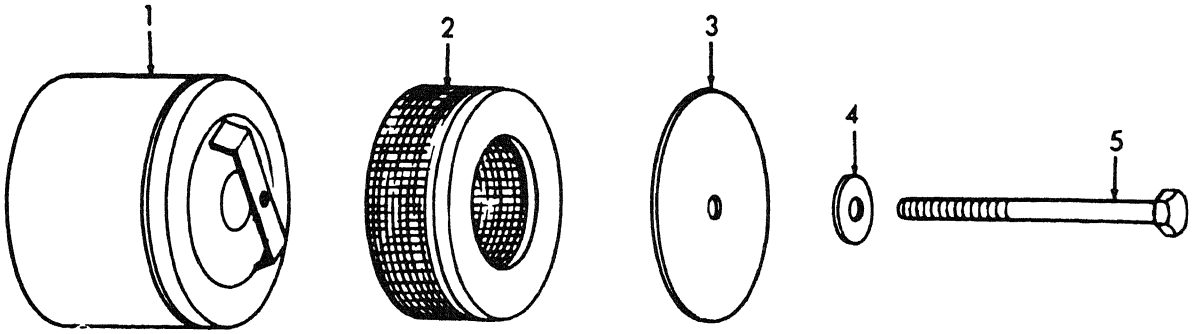

MEC 3740-200-25P/37

Figure 37. Air Filter Silencer.

INDEX TO PARTS, FIGURE 37

REF NO.	FUNCT GROUP	APPL PARTS	ITEM NAME
1	5703	5,6,7	BODY
2	5703	5,6,7	ELEMENT
3	5703	5,6,7	TOP AY
4	5703	5,6,7	WASHER
5	5703	5,6,7	BOLT

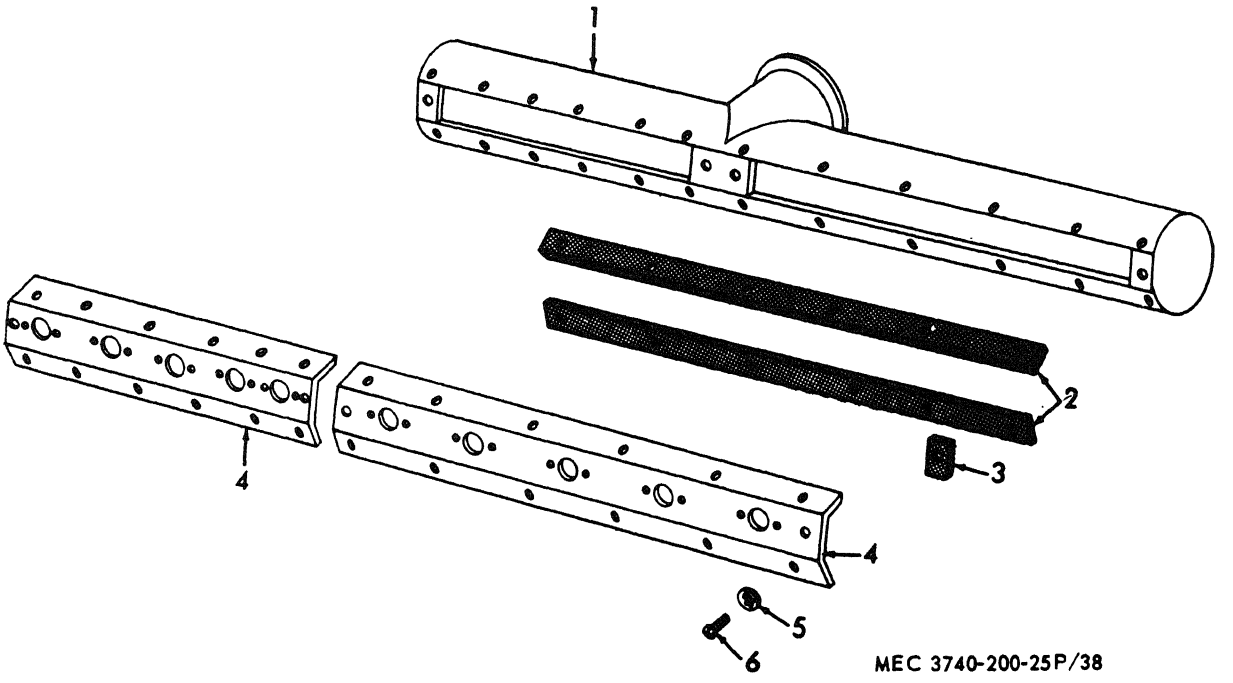

Figure 38. Nozzle Head Assembly.

INDEX TO PARTS, FIGURE 38

REF NO.	FUNCT GROUP	APPL PARTS	ITEM NAME
1	5704	6,7	BODY
2	5704	6,7	GASKET
3	5704	6,7	GASKET
4	5704	6,7	COVER
5	5704	6,7	WASHER
6	5704	6,7	SCREW

FEDERAL STOCK NUMBER AND PART NUMBER INDEX

NUMBER	CODE	PAGE
AA86ASS1	66289	097
AA86A5S1	66289	076
		087
		092
AA86A5S2	66289	071
		082
AB100B3S1	66289	001
		044
AD41A	66289	047
AF49C	66289	048
AG30	66289	048
AP26	71176	014
		064
AZ5957	82796	078
		089
		094
		099
A13200E5359	81336	023
		027
		031
		034
		075
		080
		086
		091
A13200E5362	81336	023
		075
A13200E5402	81336	012
		015
		061
		067
A13200E5412	81336	015
		066
A13200E5422	81336	011
		061
A13200E5423	81336	011
		060
A13200E5424	81336	011
		011
		060
		061
A13200E5425-1	81336	011
		011
		061
		061
A13200E5427	81336	011
		060
A13200E5431	81336	013
		063
A13200E5434	81336	006
		018
		054
		070
A179X	79575	021
		029
		073
		084
A195	82697	038
		095
A195	82796	025
		026
		033
		037
		041
		042
		078
		080
		089
		093
		098
		100
A195	82976	034
		091
A2492A	82796	026
		034
		037
		041
		079
		090
		095
		100
A2492C	82796	026
		026
		034
		034
		037
		037
		037
		041
		041
		079
		079
		090
		090
		095
		095
		095
		100
		100
A2492D	82796	026
		033
		041
		079
		090
		100
A2568	82696	078
A2568	82796	089
		094
		099
A3-4ATWB	82247	017
		068
A676	11583	022
		026
		030
		034
		037
		041
		074
		079
		085
		090
		095
		100
A7419	61976	004
		050
BA51AS1	66289	043
BB126C4	66289	048
BD103C4	66289	047
BD103C4S1	66289	047
BG209	66289	045
BG224D	66289	045
BG224DS2	66289	045
BP60-3	71176	014
		064
BWB826	00736	038
		095
BW8-80Q	00736	023
		026
		031
		034
		038
		042
		075
		080
		086
		091
		095
		101
BW8-826	00736	023
		026
		031
		034
		042
		075
		080
		086
		091
		100
BW8GS	00736	023
		026
		031
		075
		080
		086
BW8GS825	00736	023
		026
		031
		075
		080
		086
BY4631	82796	079
		089
		094
		099
B1-286S1	66289	004
		051
B13200E45420-2	81336	012
		061
B13200E5347	81336	023
		027
		031
		034
		075
		080
		086
		091
B13200E535	81336	031
B13200E535W	81336	086
B13200E5350	81336	023
		027
		031
		075
		080
		086
B13200E5353	81336	023
		075
B13200E5355	81336	014
		066
B13200E5413	81336	011
		060
B13200E5413-4	81336	011
		060
B13200E5413-5	81336	011
		060
B13200E5413-6	81336	011
		060
B13200E5415	81336	011
		060
B13200E5415-4	81336	011
		060
B13200E5415-5	81336	011
		060
B13200E5415-6	81336	011
		060
B13200E5417	81336	011
		060
B13200E5419	81336	012
		061
B13200E5421	81336	011
		061
B13200E5435	81336	001
		045
B1498B	82796	037
		094
B1498D	82795	041
		100
B1498D	82796	033
		090
B2665K	82796	079
		089
		094
		099
B3967	82796	079
		089
		094
		099
B5969	82796	079
		090
		094
		099
B6030A	82796	078
		089
		094
		099
CA62S1	66289	044
CFA32033	82254	006

NUMBER	CODE	PAGE
		053
CFA40004	82254	060
CFA40008	82254	006
		053
CFA40023	82254	017
		068
CFA40025	82254	006
		053
CFA40027	82254	006
		054
CFA40030	82254	006
		053
CFA40034	82254	007
		054
CFA40035	82254	007
		056
CFA40041	82254	010
		059
CFA40042	82254	010
		059
CFA40044	82254	006
		054
CFA40045	82254	005
		052
CFA40615	82254	017
		068
CFA40961	82254	027
		035
		038
		080
		091
		096
		101
CFA40962	82254	027
		035
		038
		042
		081
		091
		096
		101
CFA40963	82254	027
		035
		038
		042
		080
		091
		096
		101
CFA40964	82254	027
		035
		038
		042
		080
		091
		096
CFA40970	82254	024
		032
		077
		088
CFA40971	82254	027
		035
		081
		091
CFA40972	82254	024
		027
		032
		035
		077
		081
		088
		091
CFA40974	82254	024
		027
		032
		035
		077
		081
		088
		091
CFA41100	82254	038
		042

NUMBER	CODE	PAGE
		096
		101
CFA41537	82254	038
		042
		096
		101
CFA41538	82254	038
		042
		096
		101
CFB40009	82254	006
		053
CFB55020	82254	038
		042
		096
		101
CFC40010	82254	015
		067
CFC40018	82254	004
		051
CFN40566	82254	034
		038
		042
		091
		095
		100
CFN40998	82254	034
		038
		042
		091
		095
		100
CFR40031	82254	009
		058
CFR40088	82254	020
		028
		071
		076
CFR40089	82254	001
		044
CFR40288-5	82254	012
		061
CFR40419	82254	060
CFR40419-1	82254	060
CFR40420	82254	011
		060
		061
CFR40421	82254	011
		060
		060
		070
CFR40422	82254	011
		060
		060
CFR40423	82254	060
CFR40468	22375	013
		062
CFR40469	22375	013
		062
CFR40587	82254	017
		068
CFR40744	82254	056
CFR40803	82254	007
		056
CFR40829	82254	005
		018
		052
		070
CFR40870	82254	025
		033
		077
		088
CFR40975	82254	024
		032
		036
		076
		087
		092
CFR41535-1	82254	038
		042
		096
		101

NUMBER	CODE	PAGE
CFR41535-5	82254	038
		042
		096
		101
CFR41536	82254	038
		042
		096
		101
CF440974	82254	040
		097
CLA3171	82254	016
		067
CLS3H0080-0132-3	95875	059
CLS3H0080-0132-5	95875	059
CSA40330	82254	064
CW2514	82796	078
		089
		094
		099
C13200E5342	81336	023
		027
		031
		034
		075
		080
		086
		091
C13200E5358	81336	023
		027
		031
		034
		075
		080
		086
		091
C13200E5363	81336	015
		066
C13200E5428-1	81336	004
		051
C13200E5432	81336	014
		066
C142-74	79960	003
		050
C1498G	82796	025
		033
		037
		041
		079
		090
		094
		100
C181-329	79960	003
		050
C21P2	73370	024
		032
		040
		076
		087
		092
		097
C225	95875	010
		059
C2741	82796	078
		089
		094
		099
C3861	82796	037
		095
C5949	82796	078
		089
		094
		099
C5963	82796	078
		089
		094
		099
C6032B	82796	079
		094
C6032B	82796	090
		099
DA65	66289	047
DA65S1	66289	046

FEDERAL STOCK NUMBER AND PART NUMBER INDEX

NUMBER	CODE	PAGE
D13200D5341-9	81336	017
		069
D13200E0109	81336	015
		066
D13200E5341	81336	023
		027
		031
		034
		075
		080
		086
		091
D13200E5341-1	81336	017
		069
D13200E5341-3	81336	017
		069
D13200E5341-4	81336	016
		067
D13200E5341-7	81336	016
		068
D13200E5341-8	81336	017
		069
D13200E5350	81336	034
		091
D13200E5353	81336	027
		034
		080
		091
D13200E5370-20	81336	060
D13200E5399-11	81336	018
		018
		019
		069
		069
		070
D13200E5399-12	81336	016
		067
D13200E5399-13	81336	017
		068
D13200E5399-17	81336	018
		069
D13200E5399-19	81336	016
		016
		019
		067
		067
		070
D13200E5399-2	81336	013
		063
D13200E5399-20	81336	016
		016
		019
		067
		067
		070
D13200E5399-23	81336	013
		018
		063
		069
D13200E5399-24	81326	018
		070
D13200E5399-24	81336	013
		063
D13200E5399-25	81336	018
		069
D13200E5399-26	81336	018
		069
D13200E5399-27	81336	018
		069
D13200E5399-29	81336	016
		067
D13200E5399-31	81336	016
		068
D13200E5399-32	81336	016
		068
D13200E5399-34	81336	012
		062
D13200E5399-35	81336	012
		061
D13200E5399-36	81336	012
		062
D13200E5399-37	81336	012
		062
D13200E5399-38	81336	012
		061
D13200E5399-39	81336	012
		062
D13200E5399-40	81336	012
		062
D13200E5399-5	81336	018
		069
D13200E5399-7	81336	013
		062
D13200E5402	81336	011
		060
D13200E5419	81336	018
		070
D13200E5420-1	81336	018
		070
D13200E5430-4	81336	016
		067
D13200E5430-8	81336	017
		068
D13200E5499-16	81336	016
		067
D1498D	82796	025
		079
D200E5399	81336	015
		067
D2735A	82796	078
		089
		094
		099
D5949A	82796	078
		089
		094
		099
EA106C	66289	047
E8B44A	19728	008
		057
ELV3-0050-3	95875	010
		059
ESC8071CA445	81347	010
		059
E2493	82796	026
		034
		037
		079
		090
		095
E2493	82976	041
		100
E2513A	82796	078
		089
		094
		099
E2565	82796	078
		089
		094
		099
F2572	82796	078
		089
		094
		099
F3P	73370	020
		028
		071
		082
F4373	82796	026
		033
		037
		041
		079
		090
		095
		100
F4610	72850	008
		057
F4616	72850	008
		057
F4618	72850	008
		057
F4619	72850	008
		057
F4721	72850	008
		057
F4855	72850	008
		057
F63	66289	071
		082
F66	66289	076
		087
		092
		097
F6745	72850	008
		057
GAR171A	19728	056
GAR75A	19728	055
GA36A1	66289	045
		047
GBM128	19728	056
GBM21C	19728	056
GB45C	66289	047
GD100A1	66289	052
GD93C3	66289	025
		033
		037
		041
		079
		090
		094
		099
GEE27	19728	055
GGU27A	19728	055
GGU31B	19728	055
GGU32	19728	055
GGW52	19728	056
GG164	19728	056
GH46	66289	046
GJC1033A	19728	055
GJC1034A	19728	055
GJC2012AS	19728	056
GJC27B	19728	056
GJC3030FT	19728	054
GJC35A	19728	055
GJC38A	19728	056
GJC39A	19728	055
GJC42A	19728	056
GJC46	19728	055
GJC49B	19728	055
GJP1005D	19728	055
GJP1007A	19278	055
GJP1008B	19728	055
GJP102A	19728	055
GJP1102A	19728	055
GJP2001D	19728	055
GJP2044A	19728	056
GJP7404AT	19728	007
		054
GK38D	19728	055
GR32B	19728	056
GY20C	19728	055
G2788	82796	079
		090
		094
		099
G3861	82796	026
		033
		041
		079
		090
		100
G427585	82254	034
		038
		042
		091
		095
		100
HF261	66289	045
HG227D	66289	047
		071
		076
		082
		087
		092
		097

FEDERAL STOCK NUMBER AND PART NUMBER INDEX

NUMBER	CODE	PAGE
HU2425	82796	078
HU2425	97296	098
HU2452	82796	089
		093
IT12	77060	009
		058
JK50	66289	005
		044
		053
JK52	66289	052
JK55	66289	053
JX2514C	82796	078
		089
		094
		099
KA63B1	66289	048
KA63B1S1	66289	048
KF23-1	66289	049
KF24	66289	049
KF25	66289	048
KF28	66289	048
KF30	66289	048
KIT19728-36	19728	008
		057
KIT19728-37	81336	056
LC266A	66289	003
		049
LD242	66289	003
		049
LJ310	66289	002
		048
LK11	66289	004
		051
LL125	66289	004
		018
		051
		070
LP42C	66289	003
		050
LP43	66289	025
		033
		036
		040
		077
		088
		093
		098
LO-83	66289	003
		050
LO84C	66289	002
		048
L63L	66289	003
		050
MAD110	19728	008
		057
MBG2042AS	19728	008
		057
MBG402AT	19728	007
		056
MDF25	19728	055
MD292-4	66289	001
		046
ME130	66289	045
ME38	66289	048
		048
ME71	66289	044
MN21B	19728	055
		055
MS135690-405	96906	014
		066
MS13931-4	96906	046
MS13931-5	96906	046
MS13931-6	96906	046
MS13932-4	96906	046
MS13932-5	96906	046
MS13932-6	96906	046
MS13933-4	96906	046
MS13933-5	96906	046
MS13933-6	96906	046
MS13962-1	96906	046
MS13963-1	96906	047
MS13995-1	96906	046

NUMBER	CODE	PAGE
MS13996-2	96906	046
		046
		046
MS13997-1	96906	048
MS13998-1	96906	047
MS13999-2	96906	048
MS35000-1	96906	009
		058
MS35242-77	96906	013
		063
MS35291-115	96906	071
		076
		082
		087
		092
		097
MS35291-13	96906	014
		066
MS35291-3	96906	015
		015
		025
		033
		060
		066
		067
		077
		088
MS35291-31	96906	064
MS35291-32	96906	007
		054
MS35291-36	96906	007
		054
MS35291-4	96906	039
		096
MS35291-60	96906	015
		066
MS35291-66	96906	013
		063
MS35333-20	81336	013
		063
MS35333-20	96906	024
		027
		032
		035
		077
		081
		088
		091
MS35333-21	96906	031
		086
MS35333-22	96906	013
		063
MS35333-23	96906	007
		010
		039
		056
		060
		096
MS35333-25	96906	038
		042
		096
		101
MS35333-4	96906	025
		077
MS35333-40	96906	033
		088
MS35333-42	96906	009
		013
		015
		059
		063
		066
MS35338-25	96906	060
MS35650-102	96906	013
		063
MS35690-405	96906	015
		025
		033
		039
		066
		077
		088

NUMBER	CODE	PAGE
		096
MS35690-602	96906	009
		013
		059
		063
MS35691-405	96906	007
		010
		056
		059
MS35903-1	96906	046
MS35903-2	96906	046
MS35903-3	96906	046
MU54F	19728	008
		057
MZ1024AD	19728	007
		057
MZ1034CS	19728	008
		057
MZ12D	19728	008
		057
MZ1360A	19728	008
		057
MZ19C	19728	008
		057
MZ2002G	19728	008
		057
MZ2012ES	19728	008
		057
MZ2366T	19728	007
		056
MZ357	19728	008
		057
MZ358A	19728	008
		057
MZ359A	19728	008
		057
MZ364	19728	008
		057
MZ365	19728	008
		057
MZ52B	19728	008
		057
M1077	82796	078
		089
		093
		098
M2570	82796	078
		089
		094
		099
M42XA	79575	021
		029
		073
		084
NC145G4S1	66289	046
NY2430A	82796	078
		089
		098
NY2430A	82797	093
N10S10D	82796	033
		090
N2498	82796	025
		033
		037
		041
		079
		090
		095
		100
PA291	66289	047
PA332	66289	001
		044
PA333	66289	001
		045
PA340	66289	052
PB148	66289	047
PB169A	66289	071
		082
PC110	66289	003
		050
		071
		076

FEDERAL STOCK NUMBER AND PART NUMBER INDEX

NUMBER	CODE	PAGE
		087
		092
		097
PC337	66289	044
PC447	66289	004
		051
PDC21-2P	23838	031
		086
PD10	66289	047
PD11	66289	045
PD12	66289	044
PD147	66289	004
		051
PD153-2	66289	009
		058
PD173A	66289	005
		052
PD181	66289	047
PD78	66289	044
PE3	66289	003
		007
		044
		048
		049
		050
		054
		083
PE34A	66289	007
		009
		010
		056
		058
		059
PE4	66289	003
		004
		020
		024
		028
		032
		036
		040
		050
		051
		072
		072
		077
		078
		083
		088
		088
		093
		093
		098
		098
PE45A	66289	009
		058
PE46	66289	044
		048
PE49	66289	045
PE56A	66289	022
		025
		030
		033
		037
		041
		074
		079
		085
		090
		094
		099
PE59	66289	001
		045
PE6	66289	044
PE72	66289	009
		058
PE76A	66289	022
		025
		030
		033
		037
		041

NUMBER	CODE	PAGE
		074
		079
		085
		090
		094
		099
PE80A	66289	015
		015
		023
		031
		066
		066
		075
		086
PF101	66289	048
PF18	66289	001
		005
		044
		053
PF25	66289	002
		047
PF52	66289	047
PG314	66289	021
		029
		072
		083
PG488	66289	004
		051
PG516A	66289	007
		056
PG559	66289	026
		034
		037
		041
		079
		090
		095
		100
PH14	66289	002
		048
PH299	66289	045
		047
PH313A	66289	053
PH356	66289	002
		049
PH387	66289	049
PH403A3	66289	001
		044
PH452	66289	047
PH77	66289	005
		052
PH77A	66289	001
		044
PK121	66289	005
		052
PK50A	66289	049
PL53	66289	045
PL83	66289	045
PM108	66289	048
PM111-1	66289	005
		052
PM163A	66289	001
		044
PM165-1	66289	048
PM58	66289	049
PM75A	66289	005
		053
PS1330A	19728	008
		057
PU217B	19728	055
PU218A	19728	056
PU238A	19728	056
P1-1-1-8	71176	014
		065
P1-115E	66289	005
		052
P19-16	71176	064
P2473	82796	025
		033
		037
		041
		079

NUMBER	CODE	PAGE
		090
		095
		100
QB75	66289	002
		003
		043
		049
		049
QC58A	66289	003
		043
		050
QD487A	66289	043
		045
QD487B	66289	043
		045
QD612A	66289	002
		043
		047
QD613C	66289	043
		043
QD616	66289	022
		025
		029
		037
		041
		043
		073
		079
		084
		090
		094
		099
QD617	66289	043
		043
QD638A	66289	043
		052
QD660	66289	043
		047
QD661A	66289	043
		047
QD662-14	66289	043
		049
QD663A	66289	043
		049
QD667	66289	004
		043
		051
QD669	66289	002
		049
QD670	66289	003
		043
		044
		050
QD715	66289	002
		043
		048
QD728	66289	004
		051
QF81	66289	045
QF81A	66289	045
QT2477C	82796	078
		089
		093
		098
QW5149	87373	027
		080
QW5155	87373	027
		080
QX2433	82796	025
		033
		037
		041
		079
		090
		095
		100
Q21A	66289	001
		043
Q2437A	82796	025
		033
		037
		041

FEDERAL STOCK NUMBER AND PART NUMBER INDEX

NUMBER	CODE	PAGE
		079
		090
		094
		099
RB86	66289	002
		048
RC109S1	66289	004
		051
RD107A	66289	049
RF1196	66289	044
RF1199	66289	044
RF1301	66289	020
		024
		028
		032
		036
		040
		072
		077
		083
		088
		093
		098
RF269	66289	004
		020
		024
		028
		032
		036
		040
		043
		051
		071
		076
		082
		087
		092
		097
RF270	66289	004
		051
RF270-4	66289	048
		052
RF794	66289	004
		051
RJ152S1	66289	048
RK170	66289	045
RK178	66289	048
RM1122	66289	004
		051
RM1299	66289	020
		028
		072
		083
RM1319G	66289	002
		024
		032
		036
		049
		077
		088
		093
RM1319G	77278	040
		098
RM796	66289	020
		028
		072
		083
RSMS13959-2	81336	046
RSMS13959-3	81336	046
RSMS35903-1	81336	046
RV28	66289	024
		032
		036
		040
		076
		087
		092
		097
R123	66289	002
		048
R16-16	01510	014
		064

NUMBER	CODE	PAGE
SA10	66289	044
SA26	66289	047
SA52	66289	044
		053
SA68	66289	002
		047
SA74	66289	009
		058
SA93	66289	048
SD108	66289	012
		062
SD153	66289	023
		030
		074
		085
SD197A	66289	023
		031
		074
		085
SD197B	66289	026
		034
		038
		042
		080
		090
		095
		100
SD252	66289	026
		034
		038
		042
		080
		090
		095
		100
SD43	66289	045
SE135AH	66289	077
		088
		093
		098
SE135Y	66289	072
		083
SE136D	66289	007
		054
SE137D7	66289	006
		054
SE138	66289	006
		054
SE32	66289	006
		054
SK72	82796	025
		033
		037
		041
		079
		090
		094
		099
SL23	77060	009
		058
STYLEFX1-3-4	04959	018
		069
SW634D	19728	055
TA126	66289	005
		044
		053
TC322SD1	66289	052
TC328D	66289	052
TC368A	66289	005
		052
TC388-3S1	66289	047
		053
TC389-1	66289	052
TC391B	66289	053
TC422B	66289	052
TC427B	66289	002
		047
TC428G	66289	053
TE5	66289	008
		057
TT66	66289	005
		052

NUMBER	CODE	PAGE
T56-23	79960	050
T56-24	79960	050
T56-48	79960	050
T56-70	79960	050
T96DS1	66289	005
		052
UC75F	66289	001
		045
UC75FS1	66289	001
		045
VB04201ET	19728	007
		056
VB134C	66289	005
		052
VB166	66289	052
VE527W	66289	005
		052
VE542B	66289	005
		052
VE555B	66298	006
		053
VE566D1	66289	009
		058
VE693	66289	005
		053
WD41C	66289	006
		054
WE2931S1	66289	048
WE302ES1	66289	004
		051
WY2563	82796	078
		089
		094
		099
XA33	66289	007
		022
		026
		030
		034
		037
		041
		054
		074
		079
		085
		090
		095
		100
XA34	66289	006
		054
XA36	66289	007
		054
XA67	66289	012
		062
XA832	19728	008
		057
XA928	19728	055
XA929	19728	055
XC17	66289	045
XD1	66289	047
XD113	66289	049
XD13	66289	072
		077
		083
		088
		093
		098
XD17	66289	001
		001
		014
		014
		044
		046
		064
		064
XD19	66289	001
		043
		047
XD21	66289	001
		002
		043
		047

NUMBER	CODE	PAGE
XD27	66289	049
XD4	66289	048
XD5	66289	049
XED16	11583	022
		030
		074
		085
XE17	66289	046
XE61	66289	005
		052
XHS2484	79575	021
		029
		072
		083
XH1	66289	053
XK1	66289	003
		050
XK7A	66289	002
		049
XMD18	11583	026
		034
		037
		041
		079
		090
		095
		100
XS2480	82796	078
		089
		093
		098
X1-1	66289	005
		052
X1-7	66289	005
		052
X180	19728	008
		057
X260	19728	056
X261	19728	008
		057
X2882	19728	008
		057
X295	19728	054
X3279A	19728	055
X4898	19728	056
X5524	79575	021
		029
		073
		084
X6586	79575	021
		029
		073
		084
X7672	79575	021
		029
		073
		083
X7720	79575	022
		030
		074
		085
X7724	79575	021
		029
		073
		084
X7867	79575	021
		029
		073
		084
X7872	79575	022
		030
		073
		084
X7892	79575	021
		029
		073
		084
X7895	79575	021
		029
		073
		084
X7910	79575	021

NUMBER	CODE	PAGE
		029
		073
		084
X8551	79575	022
		030
		074
		085
X8555	79575	022
		030
		073
		084
X8598	79575	022
		030
		073
		084
X8774	79575	021
		029
		073
		084
YC10C	66289	009
		058
YC66S9	66289	008
		058
YC9F	66289	009
		058
YD209	66289	009
		058
YD212D	66289	021
		029
		072
		083
YD215	66289	009
		058
YD300-23	66289	026
		037
		041
		079
		095
		100
YD30023	66289	034
		090
YD69-3	66289	009
		058
YE2	66289	009
		058
YL177A	66289	009
		058
YL226A	66289	009
		058
YL292	66289	007
		056
Y7569	79575	022
		030
		073
		084
Y93DS1	66289	025
		033
		037
		041
		078
		089
		093
		098
ZV2563C	72987	094
ZV2563C	82796	078
		089
		099
ZW5139	87373	035
		038
		042
		091
		096
		101
ZW5155	87373	035
		038
		042
		091
		096
		101
Z2474	82796	078
		089
		098

NUMBER	CODE	PAGE
Z2474	82797	093
0W352	78470	033
		088
0W352	78480	025
		036
		040
		077
		093
		098
0W447	78480	025
		036
		040
		077
		093
		098
0W447	78489	033
		088
0W480T	78480	020
		028
		072
		083
06096	78480	025
		033
		036
		041
		077
		088
		093
		098
06137	78480	025
		033
		036
		040
		077
		088
		093
		098
07759	78480	020
		028
		072
		083
07762	78480	021
		028
		072
		083
07766	78480	020
		028
		072
		083
07769	78480	021
		025
		029
		033
		036
		041
		077
		083
		088
		093
		098
07770	78480	020
		025
		028
		033
		036
		040
		072
		077
		083
		088
		093
		098
08227	78480	021
		029
		072
		083
1T852	71176	014
		064
1XA256	79575	022
		030
		074
		085

FEDERAL STOCK NUMBER AND PART NUMBER INDEX

NUMBER	CODE	PAGE
10-4009-409	01510	014
		064
10A2235	22375	012
		062
10M06	00736	023
		026
		031
		075
		080
		086
10S10D	82796	025
		037
		041
		079
		095
		100
10076	73370	020
		024
		028
		032
		036
		040
		071
		076
		082
		087
		092
		097
101A710	22375	013
		062
101A714	22375	013
		062
101A923	22375	013
		062
101A926	22375	013
		062
10124	73370	020
		024
		028
		032
		036
		040
		072
		077
		083
		088
		093
		098
1015-298-8702		007
		056
102032	73370	020
		024
		028
		032
		036
		040
		071
		076
		082
		087
		092
		097
102033	73370	020
		024
		028
		032
		036
		040
		071
		076
		082
		087
		092
		097
10208	73370	020
		024
		028
		032
		036
		040
		071
		076

NUMBER	CODE	PAGE
		082
		087
		092
		097
102483	73370	020
		024
		028
		032
		036
		040
		071
		076
		082
		087
		092
		097
10407	66289	022
		030
		074
		085
10611	73370	020
		028
		072
		083
10757	73370	020
		028
		072
		083
10776	73370	020
		024
		028
		032
		036
		040
		071
		076
		082
		087
		092
		097
10991	01510	066
111B	30327	016
		068
1110X4	79470	004
		020
		028
		051
		072
		083
11140	01510	065
11150	01510	065
1120	01510	012
		014
		062
		065
11248	01510	064
11249	01510	064
11255	01510	065
11322	01510	065
11429R	01510	065
11443	01510	065
		066
11512	01510	065
11563	73370	024
		032
		036
		040
		077
		088
		093
		098
11582	73370	024
		032
		036
		040
		076
		087
		092
		097
11600	01510	065
11701	01510	065
11703	01510	065

NUMBER	CODE	PAGE
11705	01510	065
11707	01510	066
11739	01510	065
11772R	01510	065
11778	01510	066
12X1014	19728	008
		057
12X195	19728	055
12X196	19728	055
12X199	19728	055
		055
12X864	19728	056
1215-12	85274	013
		062
1215-12WM1	85274	013
		062
1215-12WM2	85274	013
		063
1215-12WM3	85274	013
		063
1215-12WM5	85274	013
		063
1215-12WM6	85274	013
		062
1216-13WM4	85274	013
		062
12398	73370	020
		024
		028
		032
		036
		040
		072
		077
		083
		088
		093
		098
13200E5436	97403	002
		049
13446	73370	020
		024
		028
		032
		036
		040
		072
		077
		082
		087
		093
		098
137	95875	010
		059
15-186	79575	021
		029
		073
		084
1650-663-4816		002
		043
		047
17688	61976	003
		050
17983	61976	003
		050
188809	66289	071
		082
1941	70903	019
		070
20X1063	19728	055
20X1377	19728	055
20X3284	19728	055
20X3389	19728	055
2061A	79575	021
		029
		073
		084
210058	66289	092
210068	66289	076
		087
		097
2122	79575	021

FEDERAL STOCK NUMBER AND PART NUMBER INDEX

NUMBER	CODE	PAGE
		029
		073
		084
213-1-179	09058	063
213-1-187	09058	063
213-1-401-99	09058	063
213-1-782	09058	063
213-1-783	09058	014
		064
213-1-786	09058	014
		064
213-1-903-99	09058	063
213-10-202	09058	063
213-10-204	09058	064
213-10-205-1	09058	063
213-10-206-1	09058	064
213-10-213-1	09058	064
213-10-214-1	09058	064
213-10-215	09058	064
213-10-216	09058	064
213-10-280	09058	064
227	95875	010
		059
228	95875	010
		059
2288	79575	021
		029
		073
		084
23A9S	23838	039
		096
2300X6	04255	026
		080
2510-039-7699		022
		030
		073
		084
26822A	60038	045
26881	60038	045
269P	30327	004
		005
		016
		016
		016
		051
		052
		067
		068
		068
2805-309-8040		047
		071
		076
		082
		087
		092
		097
2805-339-5589		048
2805-339-5595		046
2805-339-5598		071
		082
2805-353-5889		003
		049
2805-360-8332		043
		043
2805-360-8334		002
		047
2805-360-8345		045
2805-366-6218		043
		043
2805-366-6231		045
2805-366-6238		045
2805-366-6240		045
2805-366-6248		048
2805-366-6249		048
2805-366-6270		002
		003
		043
		049
		049
2805-366-9740		043
		045
2805-374-9710		047

NUMBER	CODE	PAGE
2805-374-9746		047
2805-388-6660		046
2805-388-6661		046
2805-517-9809		046
2805-517-9810		046
2805-526-8753		076
2805-527-7732		043
		052
2805-528-5799		046
2805-528-6097		048
2805-528-6396		048
2805-529-8379		046
2805-536-8753		092
		097
2805-536-8776		049
2805-536-8835		005
		052
2805-536-9753		087
2805-554-1005		046
		046
		046
2805-554-9029		047
2805-560-9300		002
		048
2805-571-1100		046
2805-608-4998		046
2805-627-3467		047
2805-641-7404		019
		063
		070
2805-652-9757		047
2805-685-6019		023
		030
		074
		085
2805-695-2179		045
2805-695-2180		045
2805-695-2181		044
2805-695-2183		048
2805-695-2186		048
2805-708-9194		002
		048
2805-708-9195		002
		047
2805-715-0424		046
2805-715-5326		045
2805-715-5327		045
2805-718-6972		001
		044
2805-720-4773		001
		043
2805-730-6327		048
2805-739-9927		047
2805-741-0242		049
2805-741-0243		049
2805-741-0380		048
2805-767-9386		046
2805-776-8016		043
		047
2805-776-8017		043
		047
2805-776-8078		044
2805-776-8111		003
		049
2805-776-8114		048
2805-776-8115		043
		049
2805-839-5275		046
2805-839-5276		046
2805-919-3602		002
		043
		048
2910-142-2738		025
		033
		036
		040
		077
		088
		093
		098
2910-217-3489		037
		095

NUMBER	CODE	PAGE
2910-282-7557		021
		029
		072
		083
2910-305-5749		020
		025
		028
		033
		036
		040
		072
		077
		083
		088
		093
		098
2910-347-5613		001
		044
2910-354-3834		025
		033
		036
		040
		077
		088
		093
		098
2910-358-4317		020
		028
		072
		083
2910-358-4787		003
		043
		050
2910-358-5327		021
		028
		072
		083
2910-368-6657		021
		025
		029
		033
		036
		041
		072
		077
		083
		088
		093
		098
2910-382-8768		025
		033
		036
		040
		077
		088
		093
		098
2910-580-0607		004
		051
2910-715-5328		003
		050
2910-776-7900		003
		043
		044
		050
2910-776-7902		003
		050
2910-776-7903		005
		044
		053
2910-807-7153		003
		050
2910-816-4057		004
		051
2920-035-8025		008
		057
2920-142-1888		025
		033
		037
		041
		079
		090

FEDERAL STOCK NUMBER AND PART NUMBER INDEX

NUMBER	CODE	PAGE
		094
		099
2920-143-5298		008
		057
2920-182-8527		008
		057
2920-217-3489		025
		033
		041
		079
		090
		100
2920-286-2712		078
		089
		094
		099
2920-293-5212		022
		030
		074
		085
2920-294-4115		008
		057
2920-335-4178		021
		029
		073
		084
2920-353-6610		022
		030
		074
		085
2920-353-6611		021
		029
		073
		084
2920-353-6614		022
		030
		074
		085
2920-353-6618		022
		030
		074
		085
2920-353-7422		007
		057
2920-353-7425		008
		057
2920-354-0750		079
		090
		094
		099
2920-354-0766		079
		089
		094
		099
2920-356-1221		026
		033
		037
		041
		079
		090
		095
		100
2920-360-8381		022
		025
		029
		037
		041
		043
		073
		079
		084
		090
		094
		099
2920-366-6269		029
		084
2920-366-6296		021
		073
2920-366-6306		021
		029
		073
		084
2920-367-7985		021
		029
		073
		084
2920-367-7999		021
		029
		073
		084
2920-368-6715		021
		029
		073
		084
2920-374-3481		021
		029
		073
		083
2920-428-3830		022
		030
		074
		085
2920-428-7572		078
		089
		094
		099
2920-428-7583		078
		089
		094
		099
2920-444-8605		009
		058
2920-447-9295		012
		062
2920-505-5108		007
		056
2920-537-1330		079
		089
		094
		099
2920-547-4335		008
		057
2920-555-6315		007
		056
2920-566-7806		021
		029
		072
		083
2920-598-9432		021
		029
		073
		084
2920-602-4258		078
		089
		094
		099
2920-604-7773		008
		057
2920-604-7774		008
		057
2920-604-7776		008
		057
2920-607-1324		021
		029
		073
		084
2920-626-8302		009
		058
2920-627-0946		010
		059
2920-654-3703		010
		059
2920-662-9133		022
		030
		074
		085
2920-662-9135		021
		029
		073
		084
2920-710-6107		008
		057
2920-712-1267		022
		030
		074
		085
2920-740-2845		021
		029
		073
		084
2920-740-2846		021
		029
		073
		084
2920-740-2852		022
		030
		074
		085
2920-740-2873		022
		030
		073
		084
2920-740-2882		022
		030
		074
		085
2920-778-6315		056
2920-785-6393		007
		056
2920-787-0480		021
		029
		073
		084
2920-800-8156		021
		029
		072
		083
2920-831-1171		078
		089
		094
		099
2920-841-1890		026
		034
		037
		041
		079
		090
		095
		100
2920-843-6741		056
2920-844-2035		025
		033
		037
		041
		079
		090
		094
		099
2920-861-1320		007
		054
2920-876-8346		009
		058
2920-887-1289		026
		034
		037
		041
		079
		090
		095
		100
2920-962-4598		010
		059
2920-971-1451		009
		058
2920-979-3504		025
		033
		037
		041
		078
		089
		093
		098
2920-986-9691		010
		010
		010
		059

FEDERAL STOCK NUMBER AND PART NUMBER INDEX

NUMBER	CODE	PAGE
		059
		059
2930-353-6609		021
		029
		072
		083
2940-141-9025		024
		032
		036
		040
		076
		087
		092
		097
2940-358-2436		040
		097
2940-358-2536		024
		032
		036
		040
		076
		087
		092
		097
2940-366-9747		004
		050
2940-374-3084		004
		051
2940-393-5988		024
		032
		036
		040
		076
		087
		092
		097
2940-529-2738		020
		028
		071
		082
2940-542-3807		002
		024
		032
		036
		040
		049
		077
		088
		093
		098
2940-593-2293		049
2940-606-6816		020
		028
		072
		083
2940-695-8797		003
		050
2940-732-4214		024
		032
		036
		040
		077
		088
		093
		098
2940-774-4747		004
		043
		051
297	95875	010
		059
2990-085-9035		005
		018
		052
		070
2990-141-9229		006
		054
2990-294-6749		005
		053
2990-366-6277		052
2990-374-3163		005
		052
2990-464-3619		052

NUMBER	CODE	PAGE
2990-603-4773		025
		033
		037
		041
		079
		090
		094
		099
2990-603-4775		047
		053
2990-657-4467		053
2990-677-1771		052
2990-732-1179		005
		052
2990-739-9930		005
		053
2990-776-8106		006
		054
2995-197-5863		005
		052
3K1	82796	089
		094
		099
3K1	92697	078
3TB60	71176	014
		032
		036
		040
		066
		087
		092
		097
3010A	95875	010
		059
3020-877-1194		014
		066
3030-246-0152		014
		064
3030-528-4261		007
		054
3030-542-3702		014
		064
304A193	22375	013
		062
31SS12B	82796	078
		089
		094
		099
3110-100-0802		044
3110-100-3552		045
3110-100-3904		044
3110-100-6180		048
		048
3110-144-8505		054
3110-144-8882		021
		029
		073
		084
3110-144-8988		094
3110-144-8998		078
		089
		099
3110-293-8819		045
3110-554-3559		044
3120-774-4607		056
3150X2	70470	004
		051
3200X6	04255	034
		038
		042
		091
		095
		100
3219	79575	022
		030
		074
		085
322A035	22375	012
		062
3400X2	04255	002
		048
3400X6	04255	026

NUMBER	CODE	PAGE
		034
		038
		042
		080
		091
		095
		100
3440-977-8672		023
		031
		075
		086
3629	95875	010
		059
364D064	22375	012
		062
3740-542-3716		023
		026
		031
		075
		080
		086
3740-542-3717		014
		065
3740-971-1418		012
		061
3740-971-1419		013
		063
3750-678-6664		005
		052
376C032	22375	013
		062
39SYZ20	00736	023
		026
		031
		075
		080
		086
3910	82247	017
		068
4L250	71956	007
		054
40325	01510	065
40357	01510	066
414	60038	044
420	60038	044
4210	79575	022
		030
		074
		085
4263	93146	017
		068
429-66	09058	064
4296	93146	017
		068
4320-167-8216		014
		064
4320-918-9988		063
4320-972-8724		064
4510-919-3101		002
		048
4537A3-44TW	82247	017
		068
454	95875	010
		059
4649	93146	017
		068
4652-2	82247	017
		068
466-3989	09058	014
		063
		064
4710-162-0991		006
		018
		054
		070
4710-277-5525		004
		005
		018
		020
		028
		051
		052

FEDERAL STOCK NUMBER AND PART NUMBER INDEX

NUMBER	CODE	PAGE
		070
		072
		083
4710-277-5526		017
		018
		069
		070
4710-809-8149		013
		013
		018
		018
		063
		063
		069
		070
4710-872-1781		004
		051
4720-218-5644		004
		018
		051
		070
4720-289-4869		018
		070
4730-011-6452		004
		020
		028
		051
		072
		083
4730-011-8831		004
		051
4730-014-4574		016
		016
		016
		068
		068
		068
4730-014-4575		017
		068
4730-044-4688		014
		063
		065
4730-044-4693		017
		068
4730-044-4698		014
		065
4730-044-4704		013
		062
4730-044-5686		014
		065
4730-068-9388		002
		048
4730-084-0469		013
		063
4730-187-4200		003
		050
4730-188-1854		017
		068
4730-194-0219		015
		067
4730-196-1974		017
		068
4730-200-0273		017
		069
4730-202-6694		015
		067
4730-202-7760		004
		051
4730-221-3928		006
		054
4730-230-1924		034
		042
		091
		100
4730-230-1996		017
		017
		068
		068
4730-249-3882		016
		067
4730-277-5553		016
		067

NUMBER	CODE	PAGE
4730-277-5575		004
		051
4730-277-7051		016
		067
4730-277-7899		016
		016
		067
		067
4730-278-2538		016
		067
4730-278-3358		006
		054
4730-278-3395		002
		047
4730-278-4034		017
		068
4730-278-4323		004
		020
		024
		028
		032
		036
		040
		043
		051
		071
		076
		082
		087
		092
		097
4730-278-6337		002
		049
4730-278-8365		017
		069
4730-278-8829		017
		069
4730-287-1614		016
		067
4730-287-3281		003
		050
4730-289-0147		016
		067
4730-289-0587		016
		067
4730-289-4869		016
		068
4730-293-3593		017
		068
4730-390-0138		016
		068
4730-585-2359		001
		005
		044
		053
4730-603-4470		020
		024
		028
		032
		036
		040
		072
		077
		083
		088
		093
		096
4730-639-9638		020
		025
		028
		033
		036
		040
		072
		077
		083
		088
		093
		098
4730-640-5832		002
		004
		048

NUMBER	CODE	PAGE
		051
4730-692-8775		048
		052
4730-814-4132		004
		005
		016
		016
		016
		051
		052
		067
		068
		068
4820-845-1096		016
		067
49X4	79470	002
		048
4920-428-3751		021
		029
		073
		084
4971	23838	039
		096
4971Z	23838	031
		086
5241	73370	024
		032
		036
		040
		076
		087
		092
		097
5250	79575	022
		023
		026
		030
		031
		034
		038
		042
		074
		074
		080
		085
		085
		091
		095
		100
5305-010-0749		078
		089
		093
		099
5305-010-0959		031
		062
		086
5305-011-3975		017
		068
5305-012-0687		010
		059
5305-012-0697		011
		061
5305-012-1832		078
		089
		094
		099
5305-012-2159		005
		052
		055
5305-012-2181		013
		063
5305-013-1238		026
		030
		034
		037
		041
		079
		085
		090
		095
		100
5305-013-1899		010

FEDERAL STOCK NUMBER AND PART NUMBER INDEX

NUMBER	CODE	PAGE
		059
5305-013-2768		014
		064
5305-013-3080		028
		083
5305-013-3083		020
		024
		032
		036
		040
		072
		077
		088
		093
		098
5305-013-3098		065
5305-013-3648		013
		063
5305-017-9117		046
5305-018-1629		065
5305-022-5561		022
		030
		074
		085
5305-042-0450		078
		089
		093
		098
5305-042-0699		065
5305-043-6667		013
		063
5305-044-3507		007
		010
		056
		059
5305-049-9608		001
		043
		047
5305-055-6313		064
5305-055-6314		063
5305-068-0500		006
		048
		053
		060
5305-068-0502		003
		004
		005
		006
		008
		009
		011
		044
		050
		051
		053
		054
		057
		058
		060
5305-068-0510		012
		049
		061
5305-071-2237		005
		053
5305-206-0169		078
		089
		094
		099
5305-206-1071		001
		001
		007
		044
		046
		047
		054
5305-206-8263		008
		018
		057
		069
		078
		089
		094

NUMBER	CODE	PAGE
		099
5305-206-6244		056
5305-269-2804		008
		057
5305-269-3217		022
		074
5305-272-4103		055
5305-276-7951		009
		017
		021
		029
		058
		068
		073
		084
5305-276-7956		008
		057
5305-276-8264		008
		057
5305-281-6387		025
		033
		037
		041
		079
		090
		095
		100
5305-281-8308		022
		030
		073
		084
5305-335-4180		022
		023
		026
		030
		031
		034
		038
		042
		074
		07[illegible]
		080
		085
		085
		091
		095
		100
5305-353-7448		008
		057
5305-407-9163		005
		052
5305-424-2999		022
		030
		074
		085
5305-428-4750		008
		057
5305-514-9662		025
		030
		033
		037
		041
		079
		085
		090
		094
		099
5305-527-4195		071
		076
		082
		087
		092
		097
5305-543-2218		094
5305-543-2271		065
5305-543-2281		078
		089
		099
5305-550-1310		015
		066
5305-584-8736		022
		074

NUMBER	CODE	PAGE
5305-627-4028		015
		067
5305-637-4028		015
		025
		033
		066
		077
		088
5305-637-4034		014
		066
5305-638-6834		022
		030
		074
		085
5305-638-9082		015
		066
5305-639-6026		022
		030
		074
		085
5305-639-8115		011
		015
		061
		066
5305-639-8118		015
		015
		066
		066
5305-958-5252		045
5305-959-4159		009
		058
5305-988-1170		004
		051
5305-988-1721		007
		054
5305-988-1723		006
		054
5305-988-1725		007
		007
		010
		054
		056
		059
5305-988-1726		007
		054
5306-012-6078		006
		053
5306-018-0078		003
		050
5306-019-3988		072
		077
		083
		088
		093
		098
5306-021-5377		001
		043
5306-021-7004		064
5306-038-4416		071
		082
5306-206-9166		002
		047
5306-207-9166		001
		043
5306-207-9782		014
		014
		064
		064
5306-270-9734		049
5306-286-1491		008
		057
5306-514-8458		047
5306-531-1798		004
		051
5306-543-4308		020
		024
		028
		032
		036
		040
		047
		071

FEDERAL STOCK NUMBER AND PART NUMBER INDEX

NUMBER	CODE	PAGE
		076
		082
		087
		092
		097
5306-576-0537		064
5306-639-8060		064
5306-680-6004		007
		054
5307-011-2572		003
		050
		071
		076
		082
		087
		092
		097
5307-025-7993		004
		051
5307-207-7376		045
5307-207-7377		044
5310	73370	024
		032
		036
		040
		076
		087
		092
		097
5310-010-3129		023
		026
		031
		075
		080
		086
5310-010-7823		006
		053
5310-011-3102		013
		063
5310-011-5544		025
		033
		077
		088
5310-011-5547		015
		066
5310-011-5551		071
		076
		082
		087
		092
		097
5310-012-0214		001
		046
		048
5310-012-0279		065
5310-012-0361		013
		018
		063
		069
5310-012-0377		009
		013
		015
		015
		022
		025
		030
		033
		037
		041
		059
		063
		066
		066
		074
		079
		085
		090
		094
		099
5310-012-0611		008
		057
5310-012-0614		022

NUMBER	CODE	PAGE
		030
		073
		084
5310-012-0622		009
		058
5310-012-1744		022
		030
		074
		085
5310-012-1949		044
5310-012-6189		003
		049
5310-013-4556		044
5310-013-5830		021
		029
		073
		084
5310-013-8526		010
		060
5310-013-8530		014
		055
		065
5310-013-8542		015
		015
		023
		024
		026
		026
		028
		030
		031
		032
		034
		036
		037
		040
		041
		055
		055
		060
		066
		066
		075
		077
		079
		080
		083
		085
		086
		088
		090
		093
		095
		098
		100
5310-017-8620		028
		082
5310-030-2007		056
5310-043-2226		008
		056
		057
5310-045-1005		006
		053
		056
5310-176-8160		020
		024
		028
		032
		036
		040
		072
		077
		083
		088
		093
		098
5310-186-7410		079
		090
		094
		099
5310-187-3458		021
		029

NUMBER	CODE	PAGE
		073
		084
5310-188-4185		022
		030
		074
		085
5310-205-7981		026
		026
		034
		034
		037
		037
		041
		041
		079
		079
		090
		090
		095
		095
		100
		100
5310-208-6994		008
		057
5310-209-4975		055
5310-221-3129		002
		048
5310-227-6566		034
		038
		042
		091
		095
		101
5310-261-7340		045
		049
5310-261-7341		003
		007
		044
		048
		049
		050
		054
5310-265-9214		047
5310-275-1353		022
		030
		074
		085
5310-276-2821		053
5310-282-0483		008
		057
5310-285-1591		026
		034
		037
		041
		079
		090
		095
		100
5310-316-8887		062
5310-333-6117		010
		059
5310-336-7158		089
		094
		099
5310-351-0698		022
		030
		074
		085
5310-353-5895		005
		052
5310-353-6620		021
		029
		073
		084
5310-358-7423		056
5310-366-6163		004
		051
5310-366-6294		005
		023
		026
		031
		052

FEDERAL STOCK NUMBER AND PART NUMBER INDEX

NUMBER	CODE	PAGE
		075
		080
		086
5310-366-7158		076
5310-368-1908		020
		024
		028
		032
		036
		040
		072
		077
		082
		087
		093
		098
5310-368-1911		020
		072
5310-417-8620		020
		024
		032
		036
		040
		071
		076
		087
		092
		097
5310-428-2137		009
		058
5310-514-7091		047
5310-514-8416		008
		057
5310-527-3288		010
		013
		060
		063
5310-527-3289		005
		006
		007
		010
		011
		012
		015
		052
		054
		056
		060
		060
		061
		067
5310-530-9636		049
5310-543-2705		004
		005
		007
		022
		051
		053
		054
		074
5310-582-6520		056
5310-582-9926		044
		048
5310-582-9930		022
		025
		030
		033
		037
		041
		074
		079
		085
		090
		094
		099
5310-584-5005		004
		006
		009
		011
		012
		014
		015

NUMBER	CODE	PAGE
		025
		033
		051
		053
		058
		060
		061
		066
		066
		077
		088
5310-584-8731		045
5310-595-5599		006
		054
5310-595-7235		013
		024
		027
		032
		035
		063
		077
		081
		088
		091
5310-595-7237		009
		013
		015
		025
		030
		033
		037
		041
		059
		063
		066
		079
		085
		090
		094
		099
5310-596-4908		045
5310-596-4911		003
		004
		020
		024
		028
		032
		036
		040
		050
		051
		072
		072
		077
		078
		083
		083
		088
		088
		093
		093
		098
		098
5310-596-6696		044
5310-616-6949		031
		061
		086
5310-627-6128		022
		074
5310-637-2400		001
		044
5310-637-9541		003
		050
		066
		066
5310-639-8061		007
		056
5310-641-9308		001
		045
5310-655-6314		007
		009
		010

NUMBER	CODE	PAGE
		056
		058
		059
5310-692-8335		001
		045
5310-701-6068		008
		057
5310-776-8112		002
		049
5310-794-8554		078
		089
		094
		099
5310-794-8555		026
		033
		037
		041
		079
		090
		095
		100
5310-800-5282		007
		010
		056
		059
5310-826-3773		009
		058
5315-011-2726		025
		033
		037
		041
		079
		090
		094
		099
5315-012-1224		005
		052
5315-012-4546		008
		057
5315-014-1242		065
5315-014-1244		065
5315-050-5654		064
5315-050-5753		065
5315-141-1651		052
5315-221-6005		053
5315-248-0003		055
		055
5315-251-9984		047
5315-271-3012		001
		045
5315-272-6827		005
		052
5315-276-5762		001
		045
5315-366-6242		047
5315-366-6291		005
		052
5315-367-7994		022
		030
		074
		085
5315-615-1699		099
5315-616-5523		045
5315-616-5526		056
5315-619-7342		045
5315-663-1215		052
5315-715-1699		078
		089
		094
5315-753-3893		001
		044
5315-828-8190		006
		053
5315-839-2325		005
		052
5315-952-3107		001
		045
5319-596-4745		008
		057
5320-117-7106		012
		015
		062

FEDERAL STOCK NUMBER AND PART NUMBER INDEX

NUMBER	CODE	PAGE
		067
5320-118-1759		011
		012
		060
		060
		061
5325-281-3993		011
		060
		061
5325-539-7143		009
		058
5330-056-9588		020
		024
		028
		032
		036
		040
		071
		076
		082
		087
		092
		097
5330-143-5192		056
5330-187-2962		025
		033
		036
		041
		077
		088
		093
		098
5330-187-3635		053
5330-191-1096		023
		023
		026
		027
		031
		031
		075
		075
		080
		081
		086
		086
5330-262-3306		022
		030
		074
		085
5330-270-8469		002
		018
		049
		070
5330-291-3405		020
		028
		072
		083
5330-291-5921		008
		057
5330-291-9873		050
5330-292-0320		004
		050
5330-292-1503		043
		045
5330-297-4578		021
		029
		073
		084
5330-298-0776		020
		024
		028
		032
		036
		040
		071
		076
		082
		087
		092
		097
330-358-5683		050
330-362-1447		050

NUMBER	CODE	PAGE
5330-362-1562		017
		069
5330-505-6611		011
		012
		018
		061
		061
		070
5330-508-1111		008
		057
5330-542-1420		005
		044
		053
5330-559-6862		008
		057
5330-582-4084		004
		051
5330-599-1285		024
		032
		036
		040
		076
		087
		092
		097
5330-599-5356		022
		026
		030
		034
		037
		041
		074
		079
		085
		090
		095
		100
5330-640-9612		052
5330-641-2087		045
		047
5330-684-7734		049
5330-729-5106		050
5330-793-1057		014
		064
5330-793-1058		064
5330-806-7624		013
		062
5330-925-0455		038
		042
		096
		101
5330-956-4306		042
		101
5330-956-4307		038
		096
5335-830-9983		079
		090
		094
		099
5340-050-1591		047
5340-147-3745		049
5340-232-5723		044
5340-276-5843		044
		053
5340-281-6688		022
		030
		074
		085
5340-282-5560		056
5340-353-5960		052
5340-353-6606		021
		029
		073
		084
5340-374-9707		046
5340-447-9222		021
		029
		072
		083
5340-550-5635		048
5340-582-3078		001
		044

NUMBER	CODE	PAGE
5340-598-3180		025
		033
		037
		041
		079
		090
		094
		100
5340-664-9187		008
		057
5340-675-5253		025
		033
		037
		041
		079
		090
		094
		100
5340-740-2871		021
		029
		073
		084
5340-741-0246		048
5340-776-9921		056
540-16	00736	023
		023
		026
		031
		075
		075
		080
		086
5411	79575	022
		030
		073
		084
5516	79575	022
		030
		074
		085
5518	79575	021
		029
		072
		083
5519	79575	021
		029
		073
		084
5520	79575	022
		030
		074
		085
5567	79575	021
		029
		073
		084
5610	79575	022
		030
		074
		085
5622	79575	022
		030
		074
		085
5633	79575	021
		029
		073
		084
5687028	01510	014
		065
569021	01510	014
		064
5717	79575	022
		030
		074
		085
5850	82247	068
5851	82247	017
		068
5852	82247	017
		068
5871	01510	065

FEDERAL STOCK NUMBER AND PART NUMBER INDEX

NUMBER	CODE	PAGE
5872	01510	066
5900	79575	022
		030
		074
		085
5910-127-7252		010
		059
5910-677-6348		010
		059
5910-740-2855		022
		030
		074
		085
5926	79575	022
		030
		074
		085
5930-797-9462		008
		058
5940-314-0255		021
		029
		073
		084
5940-321-9299		010
		059
5940-323-1459		009
		009
		058
		058
5970-353-7172		055
5970-656-7524		009
		058
5977-391-4031		008
		057
5977-627-3579		008
		057
5977-695-7139		008
		057
5977-696-0221		008
		057
5977-710-2044		056
6S4U	82796	078
		089
		094
		099
6S6D	82796	099
6S6U	82796	078
		089
		093
		098
60-408	80124	015
		067
60169	01510	065
6036	01510	065
6038	01510	065
6105-925-4976		056
6140-057-2553		009
		058
6145-164-7023		009
		019
		058
		070
6145-164-7033		010
		010
		018
		059
		059
		070
6145-295-0804		010
		018
		059
		070
615A1	61976	004
		050
616	95875	010
		060
617	95875	010
		060
6199	79575	022
		030
		074
		085

NUMBER	CODE	PAGE
6204	79575	022
		030
		074
		085
6424	79575	021
		029
		073
		084
6425	79575	021
		029
		073
		084
6459	01510	012
		014
		062
		065
6465	79575	022
		030
		074
		085
6560	82796	078
		089
		094
6585	79575	021
		029
		073
		084
6625-252-5545		009
		058
6680-718-7016		002
		048
6685-855-7226		013
		062
6690-704-1862		012
		062
6732	79575	021
		029
		073
		084
6810-249-9354		009
		059
6946	73370	020
		028
		071
		082
6957	79575	022
		030
		073
		084
6984	79575	022
		030
		074
		085
713-9001-107	09058	063
713-9010-205	09058	064
7420	70655	012
		061
7491	70903	009
		058
7617	79575	021
		029
		073
		084
7644	79575	021
		029
		073
		084
7871	79575	022
		030
		074
		085
7908	79575	021
		029
		073
		084
7932	01510	014
		065
79575-4	81336	022
		030
		074
		085
8LW6	82796	078

NUMBER	CODE	PAGE
		089
		094
		099
8S4U	82796	078
		069
		093
		099
8S5U	82696	078
		093
8S5U	82796	089
		098
8S6G	82796	078
		089
		094
		099
8S6N	82697	094
8S6N	82796	078
		089
		099
8S7K	82796	078
		089
		093
		099
8112	73310	036
		092
8112	73370	020
		024
		026
		032
		040
		071
		076
		082
		087
		097
8113	73370	020
		028
		071
		082
8134	73370	020
		028
		071
		082
820-6-305	09058	013
		063
8288	01510	066
8305-740-2859		021
		029
		073
		084
8739	79575	021
		029
		073
		084
8792	79575	022
		023
		030
		031
		073
		074
		084
		085
90102	01510	014
		065
90209	01510	014
		065
90247	01510	014
		064
90259	01510	065
90265	01510	014
		065
92-1000-1240-18	09058	014
		064
92-5660-1348	09058	013
		063
92-900-820	09058	063
9320-771-1512		011
		061
9320-771-1513		012
		061
9515-529-0429		012
		018

FEDERAL STOCK NUMBER AND PART NUMBER INDEX

NUMBER	CODE	PAGE
		062
		070
9515-554-0893		012
		018
		061
		070
9905-807-3712		062

NUMBER	CODE	PAGE

NUMBER	CODE	PAGE

TM 5-3740-200-25P

By Order of the Secretary of the Army:

HAROLD K. JOHNSON,
General, United States Army,
Chief of Staff.

Official:

KENNETH G. WICKHAM,
Major General, United States Army,
The Adjutant General.

Distribution:

Active Army:

USASA (2)
ACSI (1)
DCSLOG (1)
CNGB (1)
TSG (1)
CofEngrs (3)
CC-E (1)
Dir of Trans (1)
CofSptS (1)
USAMB (1)
USARTYBD (2)
USAARMBD (2)
USAIB (2)
USAADBD (2)
USAAESWBD (2)
USAAVNBD (2)
USCONARC (3)
OS Maj Comd (5) except
USASETAF (2)
USARJ (1)
MDW (1)
Armies (2)
Corps (2)
Div (2)
Engr Bde (1)
Svc Colleges (2)
Br Svc Sch (2)
USACDCEC (10)
USMA (2)
Gen Dep (10)
Engr Dep (10)
A Dep (2) except
TOAD (3)
USA Tml Comd (2)
Army Tml (1)
Div Engr (2)
Dist Engr (2)
USAERDL (3)
USAMEC (46)
Engr Cen (5)
USAREUR Engr Proc Cen (2)
USAREUR Engr Sup Con Agcy (10)
Engr FLDMS (2)
Ft Knox FLDMS (10)
Fld Comd, DASA (8)
AMS (3)
USAREURCOMZ (2)
USAC (1)
MAAG (1)
JBUSMC (1)
Units org under fol TOE:
(2 copies each UNOINDC)
8-7
3-147
3-217
5-48
5-237 (5)
5-262 (5)
5-267
5-278 (5)
5-279
8-204
8-500 (LA)
29-215
29-216

NG: None.

USAR: Same as Active Army except allowance is one copy to each unit.

For explanation of abbreviations used, see AR 320-50.

* U. S. GOVERNMENT PRINTING OFFICE: 1989 -242-451/ 5548